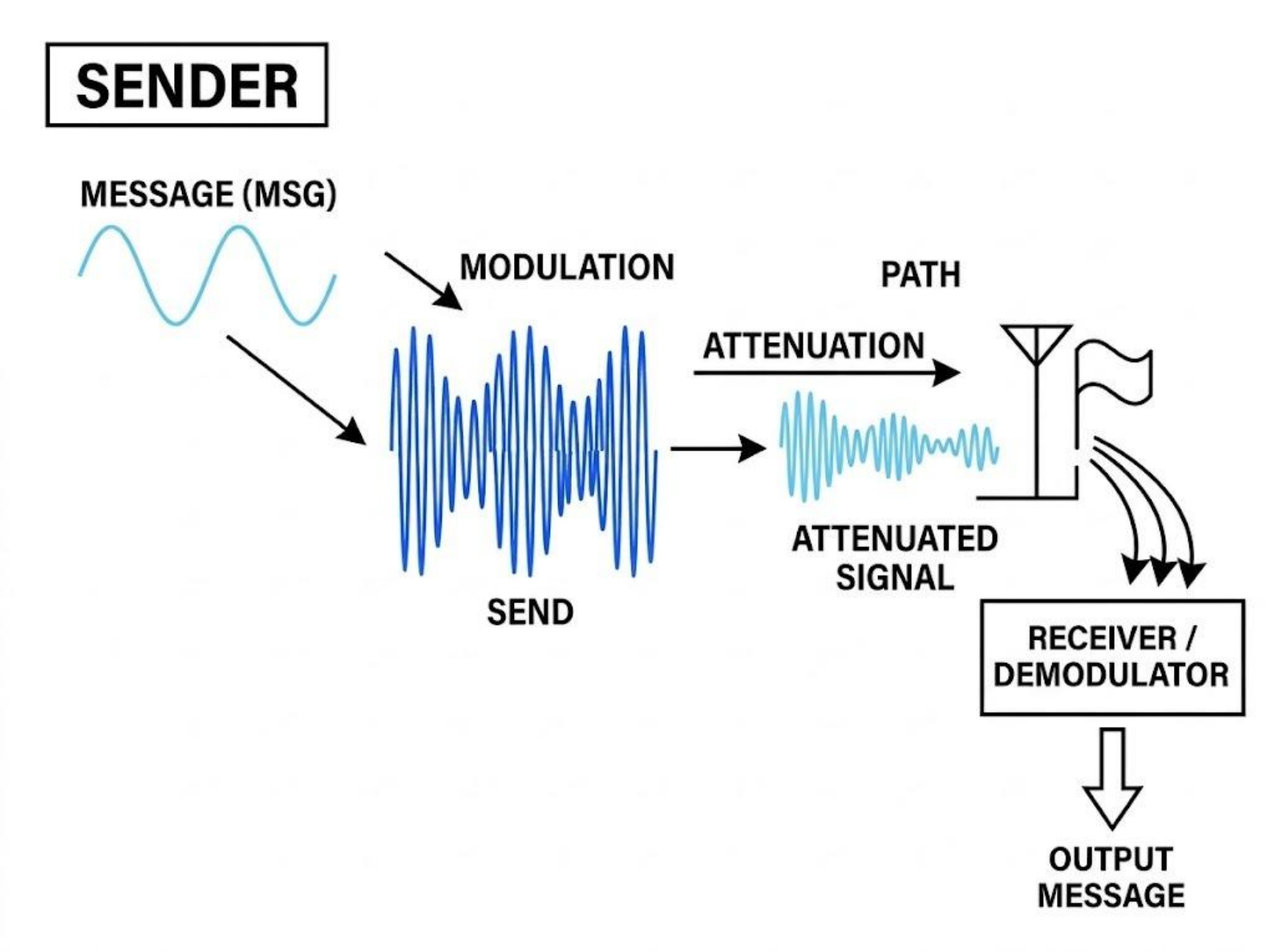
SENDER
MESSAGE (MSG)
MODULATION
PATH
ATTENUATION
ATTENUATED SIGNAL
SEND
RECEIVER / DEMODULATOR
OUTPUT MESSAGE

Design of a 2.45 GHz RF Receiver in CMOS 45nm technology

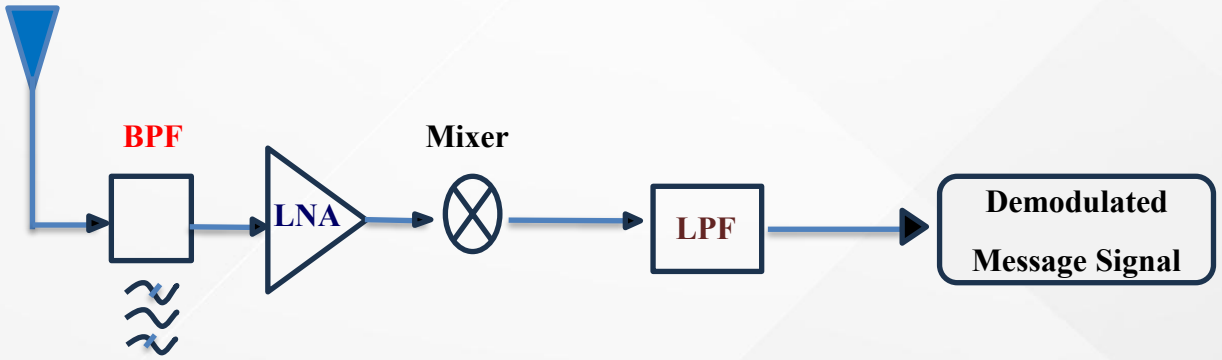

Co-Supervisor:
Dr. Raqibul Mostafa
Professor, Dept. of EEE

Co-Supervisor:
Dr. Md. Hasanuzzaman
Associate Professor, Dept. of EEE

Chair:
Azad Hossain Saykat
021 221 017

Member:
Sazzad Hossen
021 221 026

Recorder:
Suvom Karmakar
021 221 027

Member:
Md. Tahman Hossain
021 221 099

Table of Content

- Overview of RF Receiver
- Low Pass Filter
- Mixer
- Low Noise Amplifier
- Band Pass Filter
- Integrated RF Receiver
- Conclusion

Why RF Receivers Matter?

Motivation

- Compact and Low-power.
- RF front-end performance directly affects signal quality and power usage.
- Receiver performance defines signal sensitivity, power consumption, and noise tolerance.
- Global 2.45 GHz ISM Band.
- Single-Chip CMOS Integration.

Real-Life Applications

- Wireless communication: Wi-Fi, Bluetooth etc.
- Wearable devices

Block Diagram of RF Receiver Design

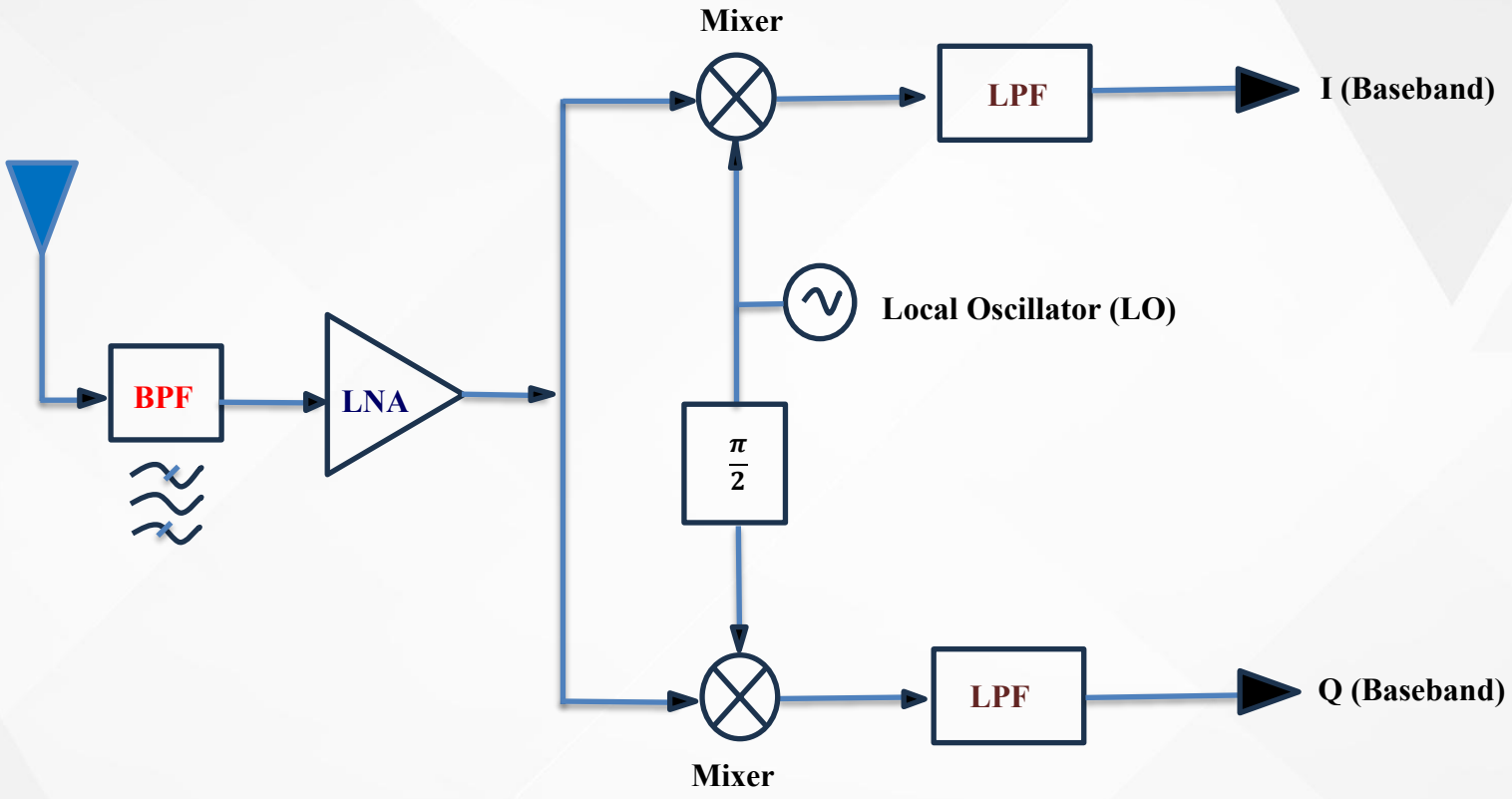

Figure: Proposed Block Diagram of the RF Receiver System

Literature Review

Paper Title	2.4 GHz Balunless Narrowband Receiver Front-End	CMOS RF Receiver System Design: A Systematic Approach	A Unified design Methodology for Front-end RF/mmWave Receivers
Block Diagram	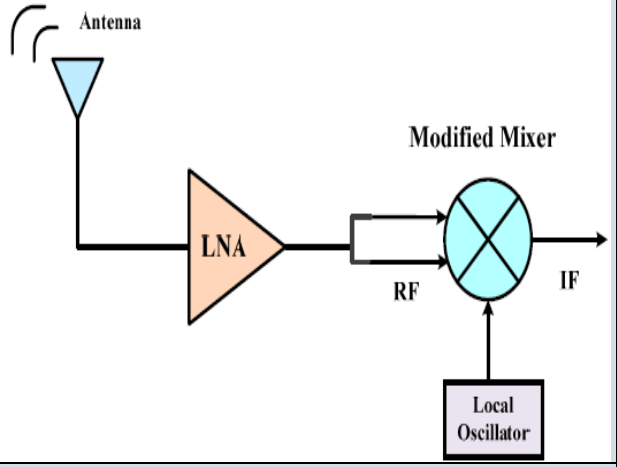	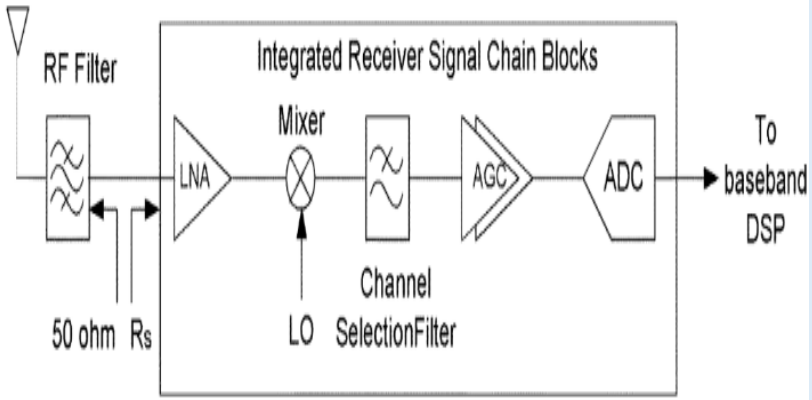	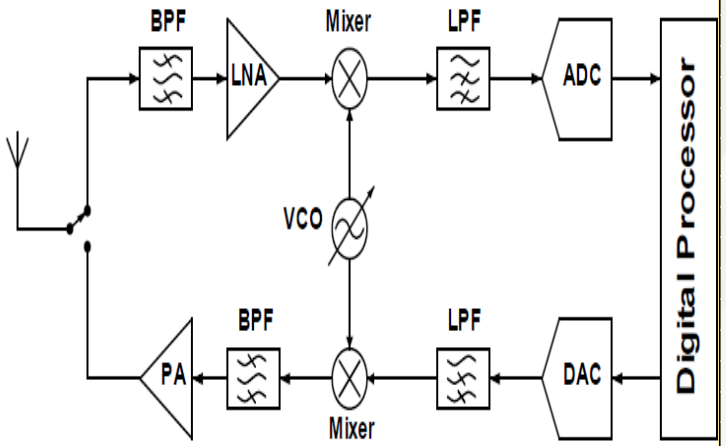
Reference	El-Desouki, M.M.; Qasim, S.M.; BenSaleh, M.S.; Deen, M.J. Toward Realization of 2.4 GHz Balunless Narrowband Receiver Front-End for Short Range Wireless Applications. Sensors 2015, 15, 10791-10805. https://doi.org/10.3390/s150510791	Wenjun Sheng, A. Emira and E. Sanchez-Sinencio, "CMOS RF receiver system design: a systematic approach," in IEEE Transactions on Circuits and Systems I: Regular Papers, vol. 53, no. 5, pp. 1023-1034, May 2006, doi: 10.1109/TCSI.2005.862286.	Michailidis, Anastasios, Alexandros Chatzis, Panayiota Tsimpou, Vasiliki Gogolou, and Thomas Noulis. 2025. "A Unified Design Methodology for Front-End RF/mmWave Receivers" Electronics 14, no. 2: 235. https://doi.org/10.3390/electronics14020235

Proposed Improvements

1. 2.45 GHz LNA Optimization

Apply systematic S-parameter methodology for achieving 15-20 dB gain with < 3 dB noise figure at 1.2V supply.

2. CMOS Technology Scaling

Leverage 45nm CMOS advances for integrated system-level design to achieve target <10mW power consumption.

3. Integrated BPF Design

Implement optimized bandpass filtering for 2.45 GHz range with precise 20-100 MHz passband control.

4. System-Level Architecture

Focus on total RF receiver system integration for 2.45 GHz applications.

RF Receiver Block Specification

1

Low Noise Amplifier (LNA) Specification

Parameter	Value
Supply Voltage	1.2 V
Power Consumption	<2mW
NF (50 Ω)	< 3dB
Gain	15 - 20 dB
S11	≤ -10dB
S22	≤ -10dB
S21	15 – 20 dB
S12	≤ -25dB

2

Low Pass Filter (LPF) Specification

Parameter	Specification
Passband Frequency	20 MHz
Stopband Frequency	30 MHz
Stopband Attenuation	> 40 dB
Bandwidth	20 MHz
Passband Ripple	1dB
Source Impedance	50 ohm

3

Band Pass Filter (BPF) Specification

Parameter	Value
Supply Voltage	1.2 V
Passband Width	20 MHz to 100 MHz
Center Frequency	2.45 GHz
Upper Cutoff Frequency	2.45 GHz + 10 MHz
Lower Cutoff Frequency	2.45 GHz - 10 MHz

4

Mixer Specification

Parameter	Specification
Supply voltage	1.2 V
Power Consumption	<2.5 mW
RF frequency	2.45 GHz
Lo Frequency	2.43GHz
Conversion Gain	>10 dB

Azad Hossain Saykat
021 221 017

Passive Low Pass Filter

Theoretical Background

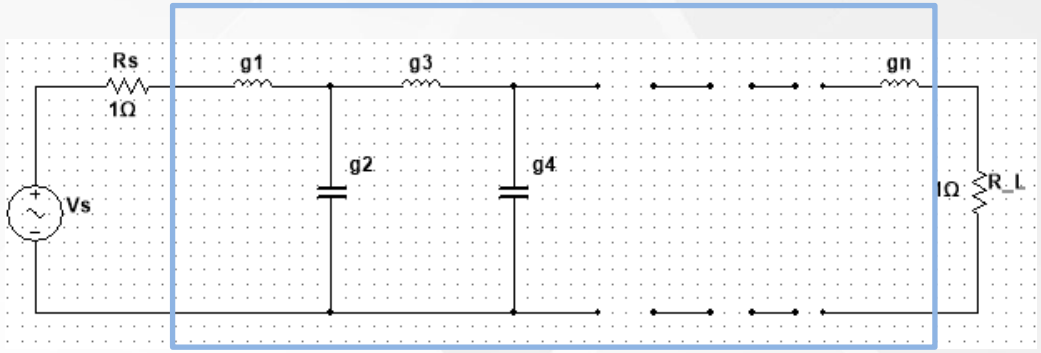

Fig. Nth Order Passive Low Pass Filter Prototype

Chebyshev low-pass element values (1-rad/s bandwidth)

n	L_1	C_2	L_3	C_4	L_5	C_6	L_7	C_8	R_2
				1.0-dB ripple					
3	2.0236	0.9941	2.0236						1.0000
5	2.1349	1.0911	3.0009	1.0911	2.1349				1.0000
7	2.1666	1.1115	3.0936	1.1735	3.0936	1.1115	2.1666		1.0000

Table: Coefficients of the Chebyshev lowpass prototype filter normalized to 1 rad/s corner frequency and 1Ω impedance.

Equations for Conversion of Normalize Value into Actual Circuit Element

Series Inductors: $$L_k = \frac{R_s * g_k}{w_c}$$

Shunt Capacitors: $$C_k = \frac{g_k}{R_s * w_c}$$

Passive Low Pass Filter

Calculation

Component	Type	Index (n)	Formula	Value	Units
Rs	Source Impedance	g0		50	Ω
L1	Series Inductor	g1 = 2.1666	L1=Rs.g1/ωc	862.08	nH
C2	Shunt Capacitor	g2 = 1.1115	C2=g2 / Rs.ωc	176.9	pF
L3	Series Inductor	g3 = 3.0936	L3=Rs.g3 /ωc	1230.96	nH
C4	Shunt Capacitor	g4 = 1.1735	C4=g4 / Rs.ωc	186.77	pF
L5	Series Inductor	g5 = 3.0936	L5=Rs.g5 /ωc	1230.96	nH
C6	Shunt Capacitor	g6 =1.1115	C6=g6 / Rs.ωc	176.9	pF
L7	Series Inductor	g7 = 2.1666	L7=Rs.g7 /ωc	862.08	nH
Rl	Load Impedance	g8		50	Ω

Low Pass Filter (LPF) Specification

Parameter	Specification
Passband Frequency	20 MHz
Stopband Frequency	30 MHz
Stopband Attenuation	> 40 dB
Bandwidth	20 MHz
Passband Ripple	1dB
Source Impedance	50 ohm
Load Impedance	50 ohm

Chebyshev Type I:

$$N = \frac{\cosh^{-1}\left(\frac{\sqrt{10^{\left(\frac{A_s}{10}\right)} - 1}}{\sqrt{10^{\frac{A_p}{10}} - 1}}\right)}{\cosh^{-1}\left(\frac{f_s}{f_p}\right)} = 7^{th}\ (Order)$$

Azad Hossain Saykat
021 221 017

Passive Low Pass Filter

Schematic Diagram

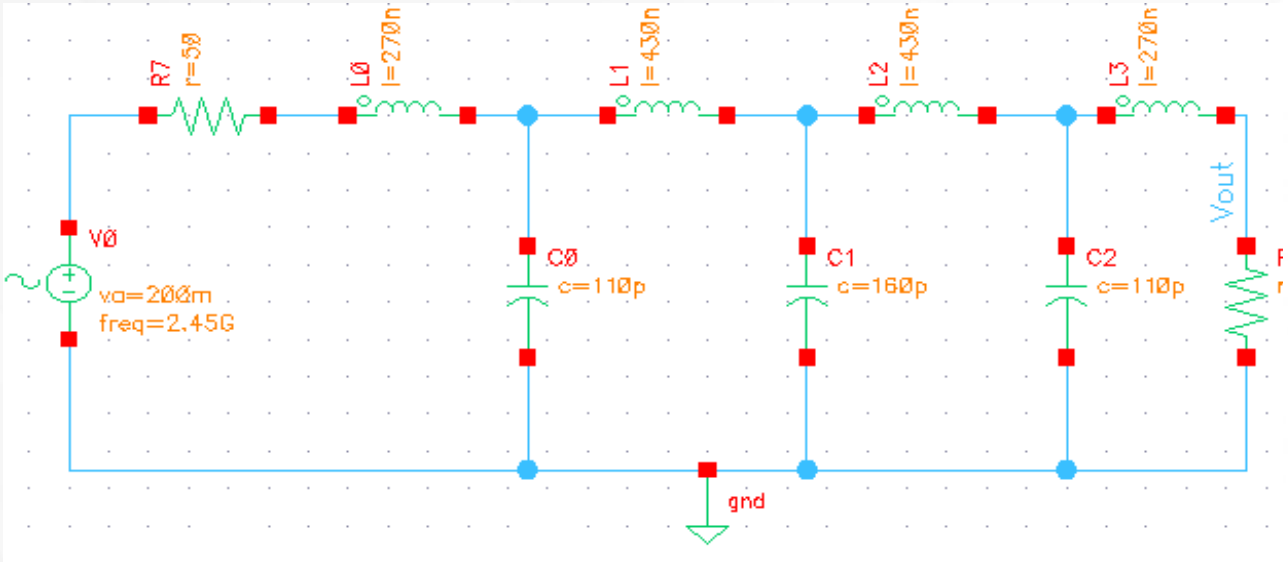

AC Analysis

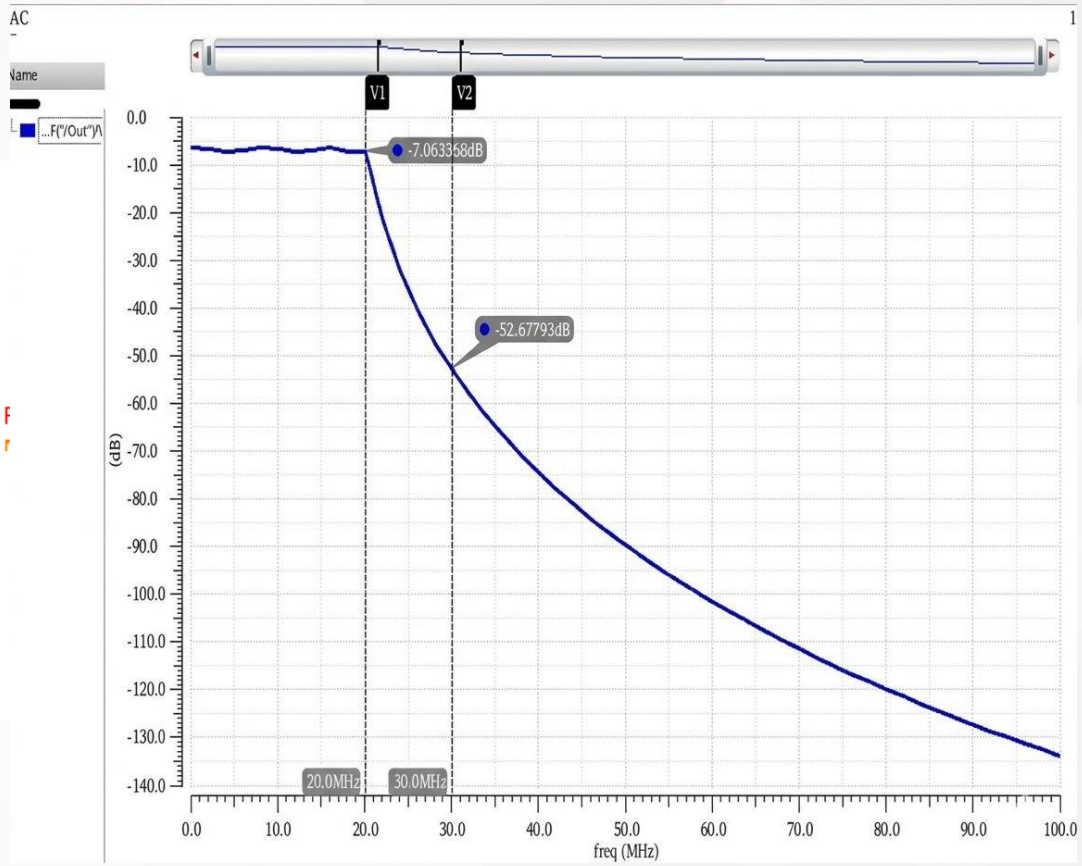

Azad Hossain Saykat
021 221 017

Active Low Pass Filter

Block Diagram

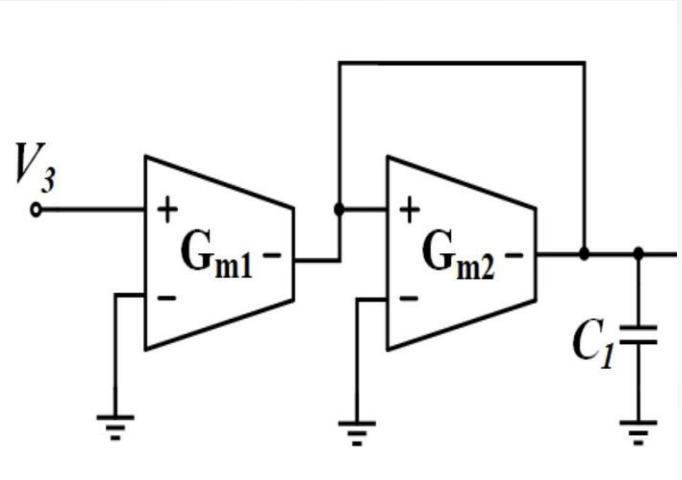

Fig. 1st Order Gm-C Filter Block Diagram

Power Consumption
$= 124\mu A * 1.2V \ = \ 0.15mW$

Schematic Diagram

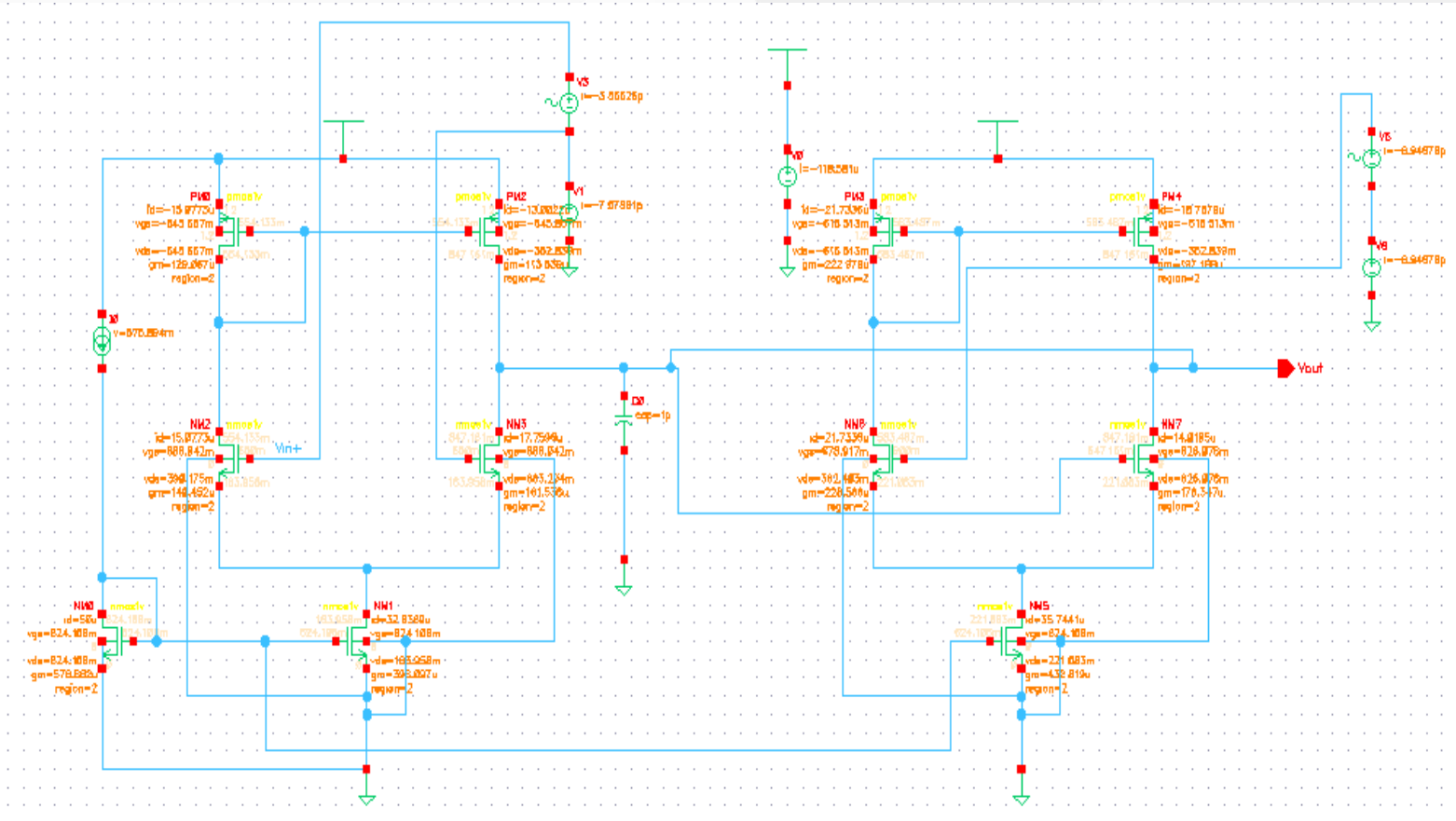

Azad Hossain Saykat
021 221 017

Active Low Pass Filter

Transient Analysis

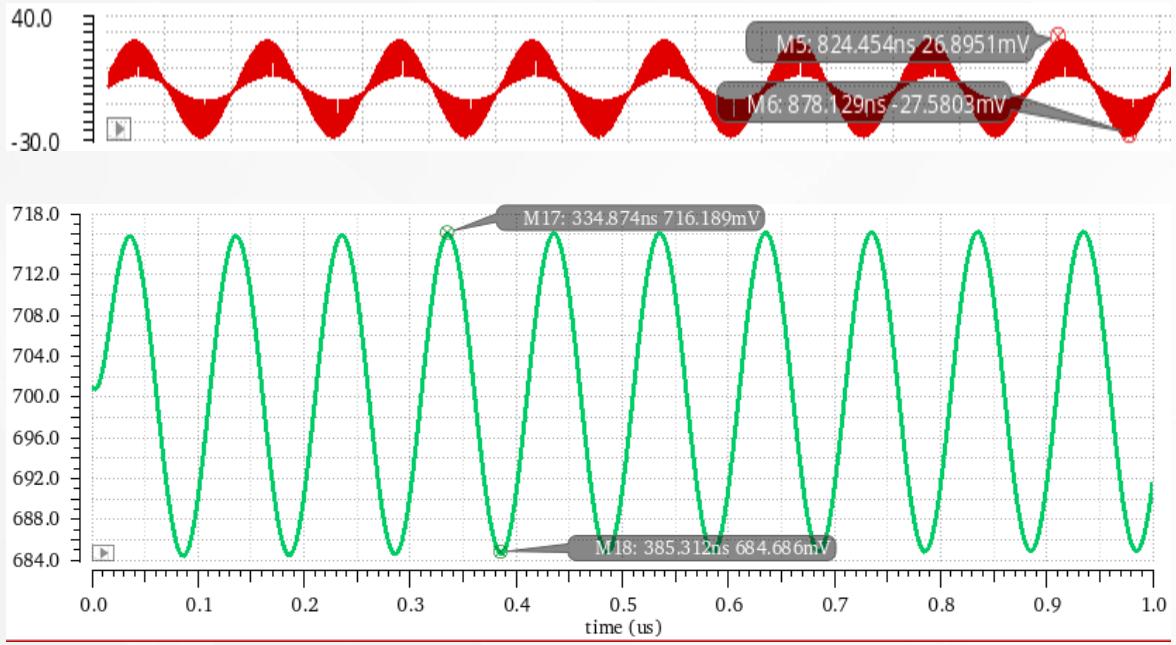

AC Analysis

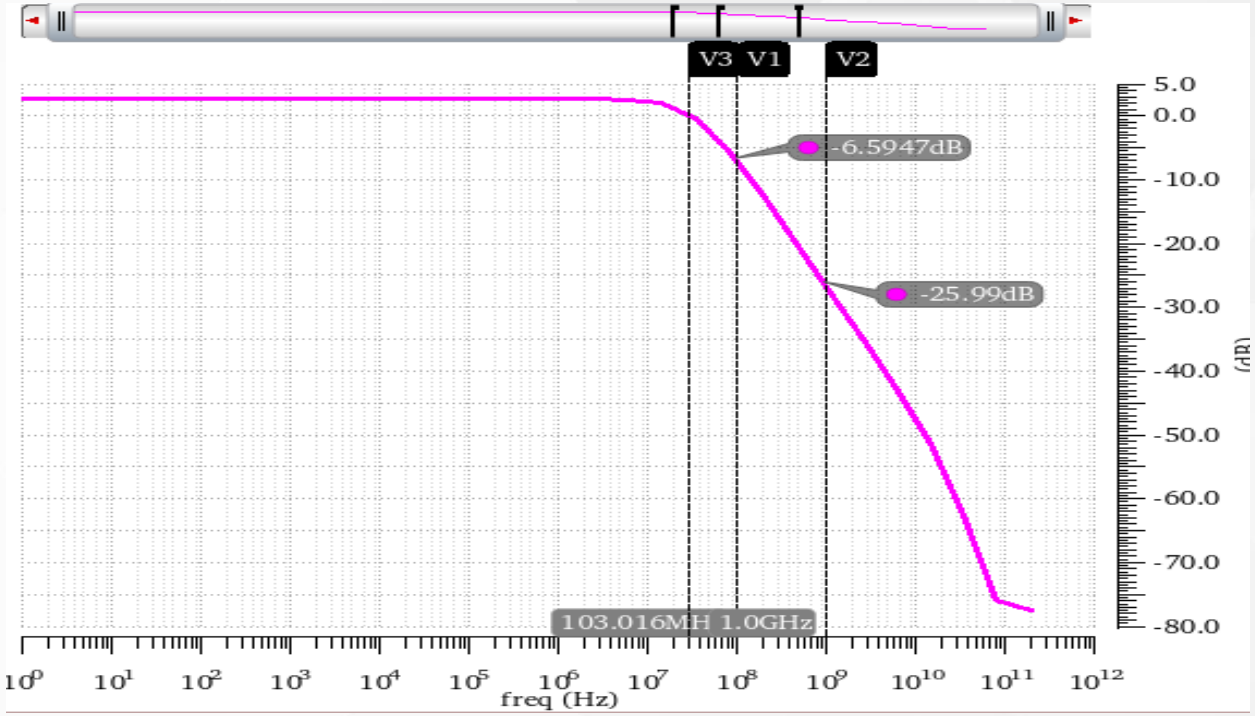

Azad Hossain Saykat
021 221 017

Active 2nd Order Low Pass Filter

Block Diagram

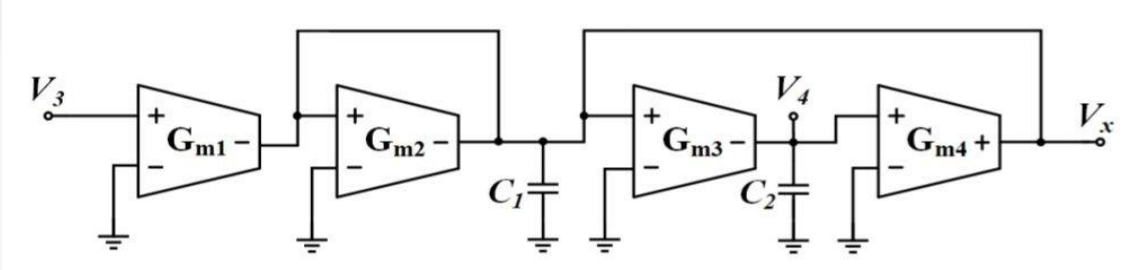

Circuit Diagram

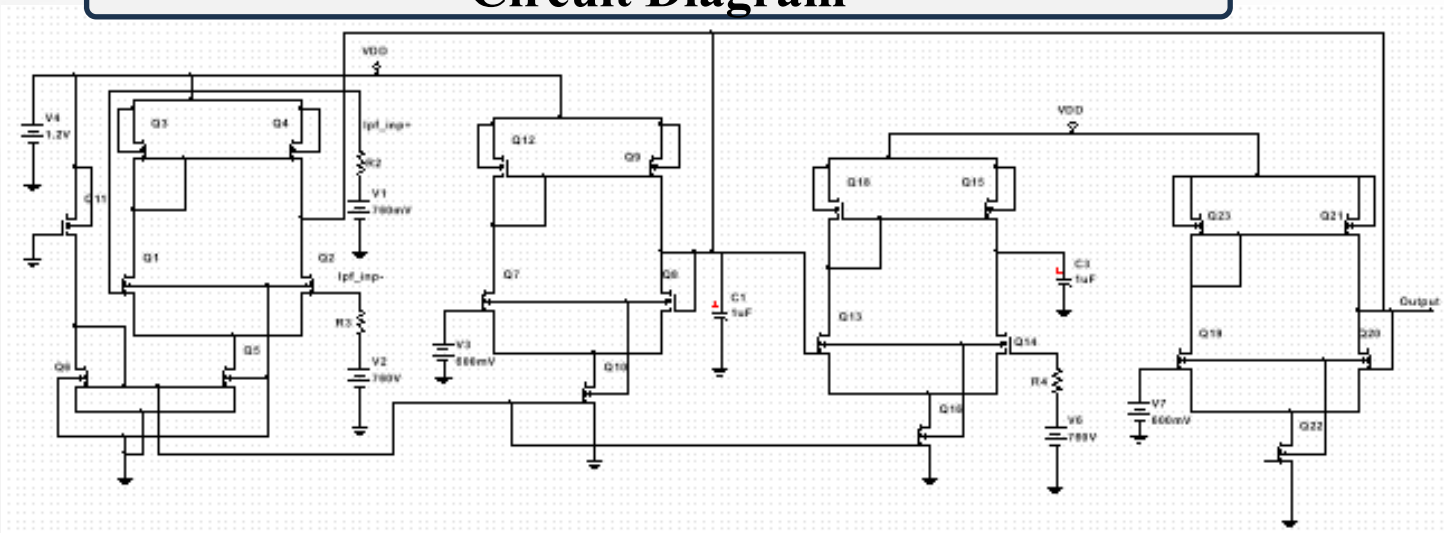

AC Analysis

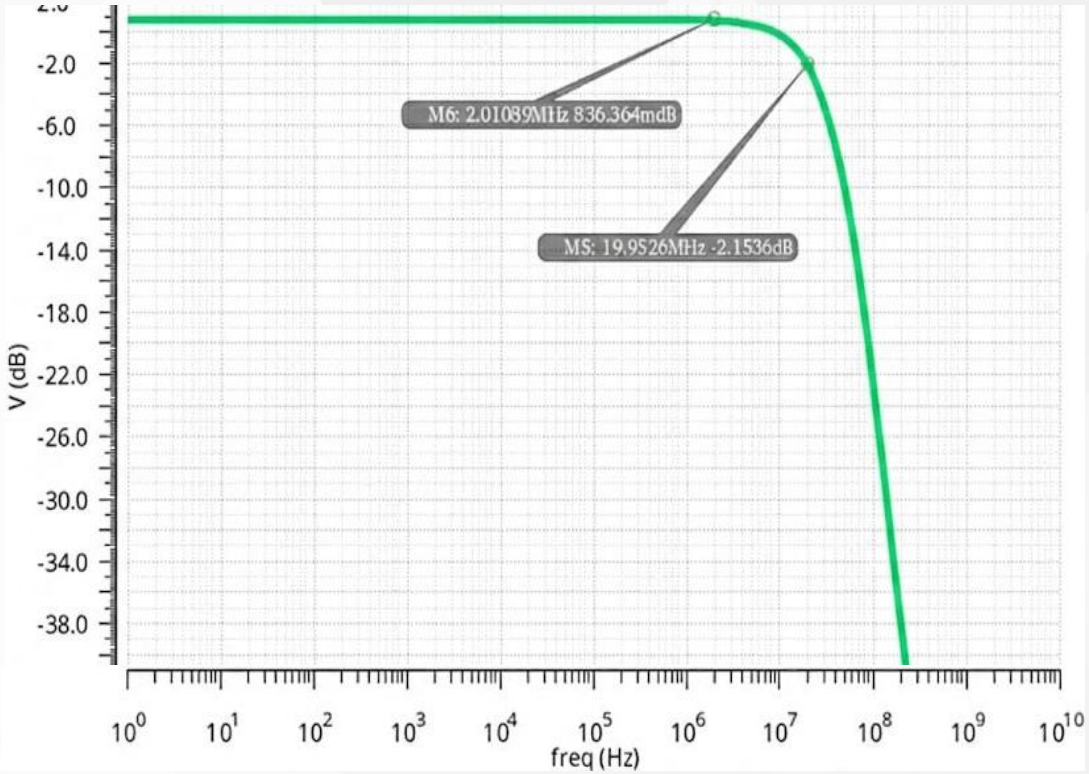

Power Consumption
$= 182\mu A * 1.2V \ = \ 0.22mW$

Azad Hossain Saykat
021 221 017

Mixer

Theoretical Background

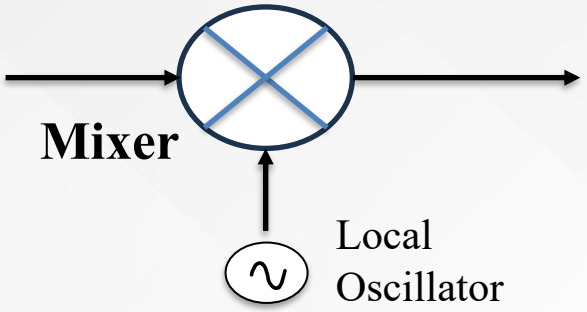

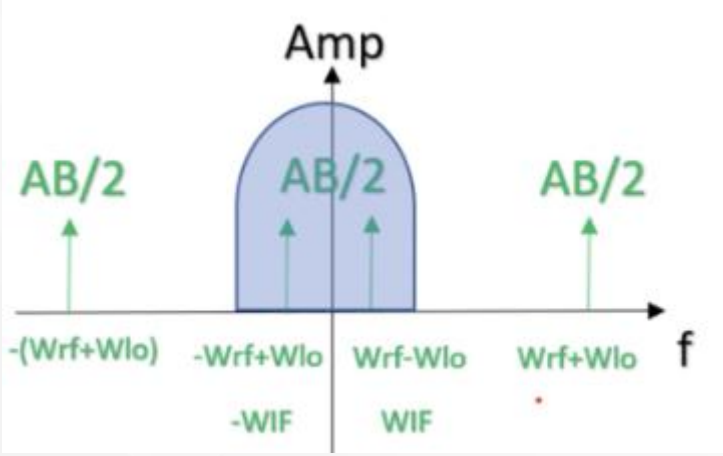

Mixer

To convert a high-frequency RF signal (2.45 GHz) down to a lower IF signal (50 MHz) for easier filtering or processing.

It does this by multiplying the RF signal with a Local Oscillator (LO) signal:

$$v_{IF}(t) = v_{RF}(t) \times v_{LO}(t)$$

Because of trigonometric properties:

$$\cos(\omega_{RF}t)\cos(\omega_{LO}t) = \frac{1}{2}[\cos(\omega_{RF} - \omega_{LO})t + \cos(\omega_{RF} + \omega_{LO})t]$$

output contains sum and difference frequencies (IF = |RF – LO|).

Mixer

How the Gilbert Cell Circuit is Developed?

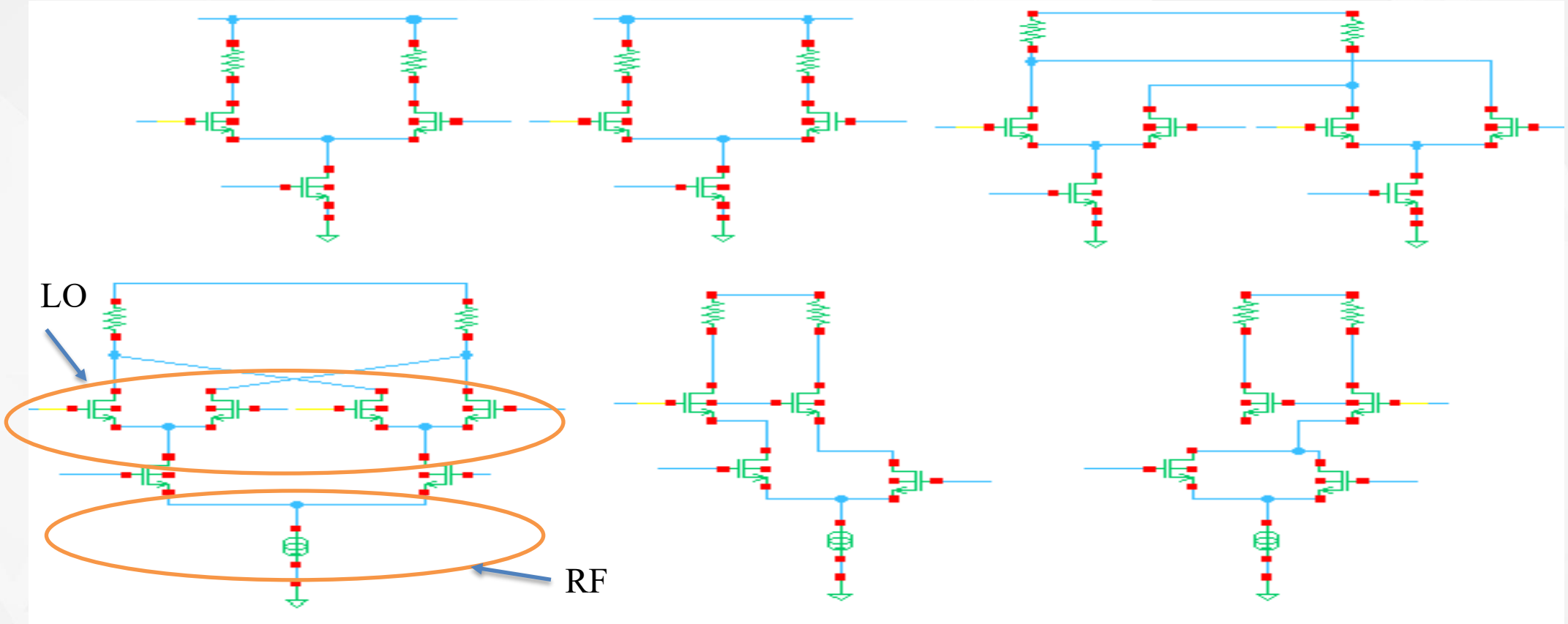

Mixer

Calculation

Parameter	Specification
Supply voltage	1.2 V
Power Consumption	<2.5 mW
RF frequency	2.45 GHz
Lo Frequency	2.43Ghz
Conversion Gain	>10 dB
Load Resistance	$1k\ ohm$
B_{eff}	$\frac{362uA}{V^2}$
V_{th}	355mV

Type	Formula	Value	Units
Bias Current	$I_{bias} = \frac{P}{2}$	1.25	mA
Current per Branch	$I_d = \frac{I_{bias}}{2}$	0.625	mA
Transconductance	$g_m = \frac{(A_v * \pi)}{2 * R_{load}}$	15.708	mS
Rf Overdrive Voltage	$V_{ov} = 2 * \frac{I_d}{g_m}$	80	mV
RF Stage (M1, M2) Sizing	$\frac{W}{L} = \frac{2 * I_d}{B_{eff} * V_{ov}^2}$	528.6	-
LO Source Voltage	$Vs_{Lo} = Vcm_{rf} - V_{th}$	0.405	V
LO Overdrive Voltage	$V_{ov} = Vcm_{lo} - Vs_{Lo} - V_{th}$	0.1	V
LO Stage Sizing	$\frac{W}{L} = \frac{2 * I_d}{B_{eff} * V_{ov}^2}$	345.3	-
Tail Sizing	$\frac{W}{L} = \frac{2 * I_d}{B_{eff} * V_{ov}^2}$	83.6	-

Suvom Karmakar
021 221 027

Mixer

Schematic Diagram

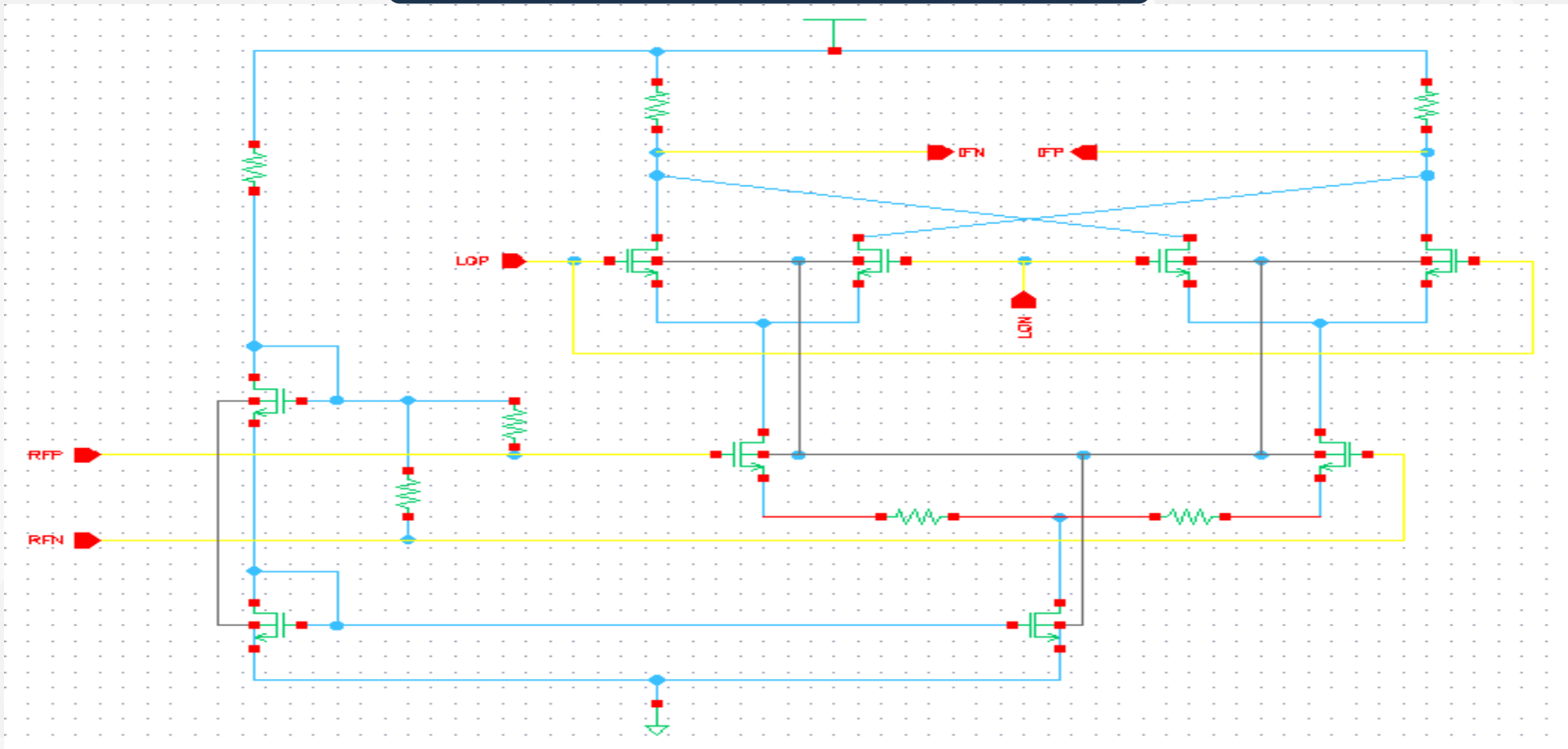

Power Consumption = $2.51mW$

Suvom Karmakar
021 221 027

Mixer

Transient Analysis

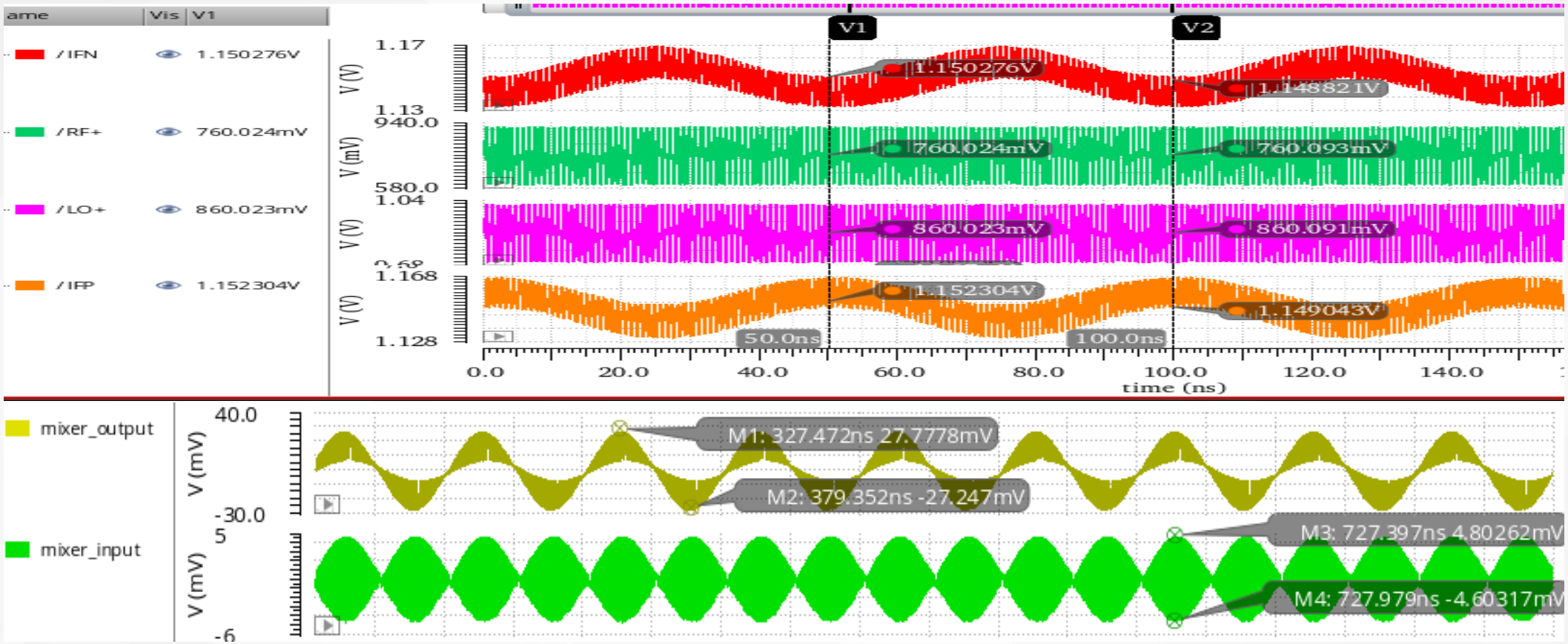

Gain = 15.34 dB

Low Noise Amplifier

Description

- The LNA amplifies the weak received signal with minimal noise.

Low Noise Amplifier (LNA) Specification	
Parameter	**Value**
Supply voltage	1.2 V
Power Consumption	2mW
Frequency	2.45 GHz
NF (50 Ω)	< 3dB
Gain	15 - 20 dB
S11(Input Return Loss)	≤ -10dB
S22(Output Return Loss)	≤ -10dB
S21(Forward Gain)	15dB - 20dB
S12(Reverse Isolation)	≤ -25dB

Low Noise Amplifier

Theoretical Background

Input impedance, $Z_{in} = R_g + R_{Ls} + R_{Lg} + s(L_s + L_g) + \frac{1}{sC_{gst}} + \frac{g_m}{C_{gst}} L_s$

$$R_e(Z_{in}) = \frac{g_m}{C_{gst}} L_s = w_t L_s = R_s$$

$$Im(Z_{in}) = w(L_s + L_g) - \frac{1}{w\, C_{gst}} = 0$$

Some transistor parameters in 45 nm technology are,

Parameter	Value
Supply Voltage	VDD = 1.2 V
Transistor Length	L = 180 nm (Minimum length: 45 nm, set to 4 times minimum)
Threshold Voltage	V_{th} = 0.32 V
Electron Mobility	$\mu = 220 \frac{cm^2}{v.s}$
Gate Oxide Thickness	t_{ox}= 1.8 nm

Suvom Karmakar
021 221 027

Low Noise Amplifier

Calculation

Step	Calculation Details
(I)	$I_D = \frac{P_D}{V_{DD}} = \frac{2\,\mathrm{mW}}{1.2\,\mathrm{V}} = 1.667\,\mathrm{mA}$
(II)	$C_{ox} = \frac{\epsilon_{ox}}{t_{ox}} = \frac{3.9\times8.854\times10^{-12}}{1.8\,\mathrm{nm}} = 19.183\times10^{-3}\,\mathrm{mF/m^2}$
(III)	$W_{opt} = \frac{1}{3W_0\,L\,C_{ox}\,R_s} = \frac{1}{3\times(2\pi\times2.45\times10^9\times180\times10^{-9}\times19.183\times10^{-3}\times50)} = 125\,\mu\mathrm{m}$
(IV)	$g_m = \sqrt{2\mu_n C_{ox}\frac{W_{opt}}{L}I_D} = \sqrt{2\times22\times10^{-3}\times19.183\times10^{-3}\times\frac{125\times10^{-6}}{180\times10^{-9}}\times1.667\times10^{-3}} = 31.25\,\mathrm{mA/V}$
(V)	$C_{gst} = \frac{g_m L_s}{R_s} = \frac{31.25\times10^{-3}\times2\times10^{-9}}{50} = 1.25\,\mathrm{pF}$
(VI)	$C_{gs\,\mathrm{mos}} = \frac{2}{3}W_{opt}LC_{ox} = \frac{2}{3}\times125\times10^{-6}\times180\times10^{-9}\times19.18\times10^{-3} = 287.75\,\mathrm{fF}$
(VII)	$C_{gs\,\mathrm{external}} = C_{gst} - C_{gs\,\mathrm{mos}} = 1.25\times10^{-12} - 287.75\times10^{-15} = 962.255\,\mathrm{fF}$
(VIII)	$L_g = \frac{1}{\omega_0^2 C_{gs\,t}} - Ls = \frac{1}{(2\pi\times2.45\times10^9\times1.25\times10^{-12})} - 2\times10^{-9} = 1.37\times10^{-9}\,\mathrm{H}$
(IX)	$\mathrm{Gain} = g_m R_p = 10 \quad\Rightarrow\quad R_p = \frac{10}{g_m} = \frac{10}{31.25\,\mathrm{mA/V}} = 320\,\Omega$
(X)	$Q = \sqrt{\frac{R_p}{R_s} - 1} = \sqrt{\frac{320}{50} - 1} = 2.32$
(XI)	$Q = \frac{R_p}{\omega_0 L_d} = L_d = \frac{320}{2\pi\times2.45\times10^9\times2.32} = 8.94\times10^{-9}\,\mathrm{H}$
(XII)	$C_d = \frac{1}{\omega_0^2 L_d} = \frac{1}{(2\pi\times2.45\times10^9)^2\times8.94\times10^{-9}} = 471.81\,\mathrm{fF}$
(XIII)	$V_{gs} = V_{th} + \sqrt{\frac{2I_D}{\mu_n C_{ox}\frac{W}{L}}} = 0.32 + \sqrt{\frac{2\times1.667\times10^{-3}}{22\times10^{-18}\times19.183\times10^{-3}\times125\times10^{-6}}} = 420\,\mathrm{mV} \approx 500\,\mathrm{mV}$
(XIV)	$L_m = \frac{Q\times50}{\omega_0} = \frac{2.32\times50}{2\pi\times2.45\times10^9} = 7.535\times10^{-9}\,\mathrm{H}$
(XV)	$C_m = \frac{1}{\omega_0^2 L_m}\times\frac{Q^2}{Q^2+1} = \frac{1}{(2\pi\times2.45\times10^{10})^2\times7.535\times10^{-9}}\times\frac{2.32^2}{2.32^2+1} = 472.29\,\mathrm{fF}$

Suvom Karmakar
021 221 027

Low Noise Amplifier

Schematic Design

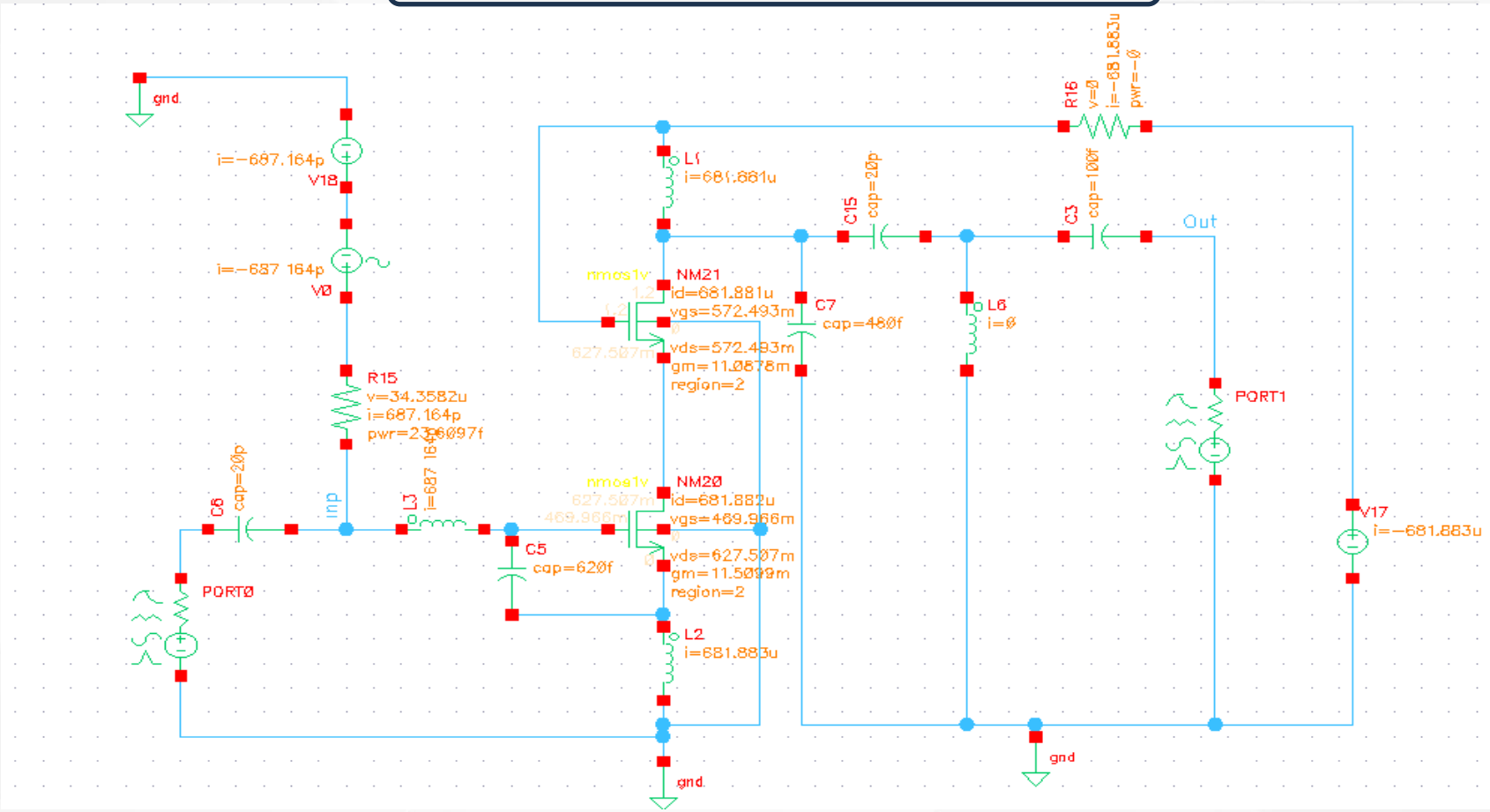

Power Consumption
$= 681\mu A * 1.2V \ = \ 0.82mW$

Suvom Karmakar
021 221 027

Low Noise Amplifier

AC Analysis

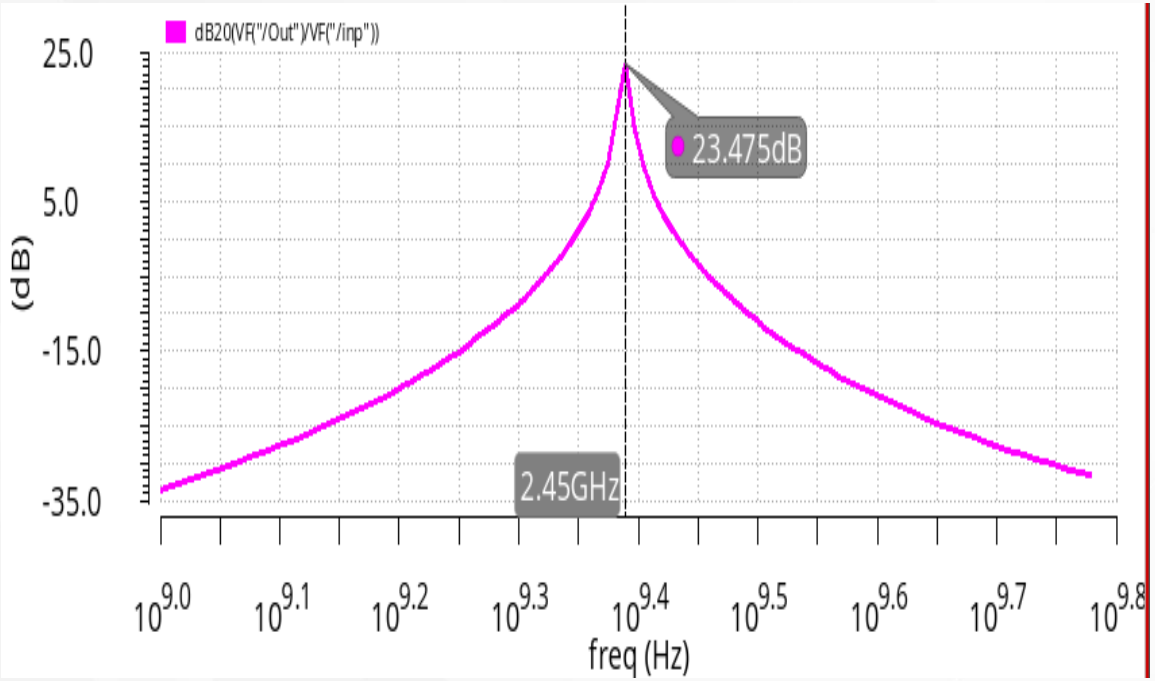

Stability Factor & NF Analysis

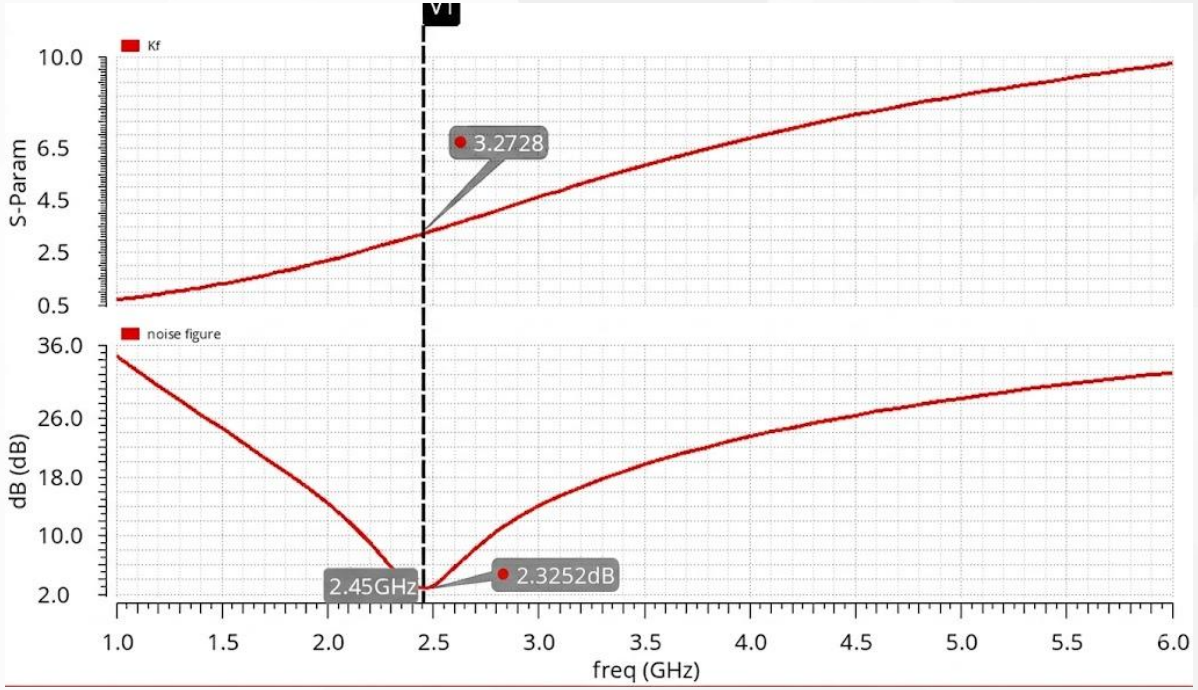

Low Noise Amplifier

Transient Analysis

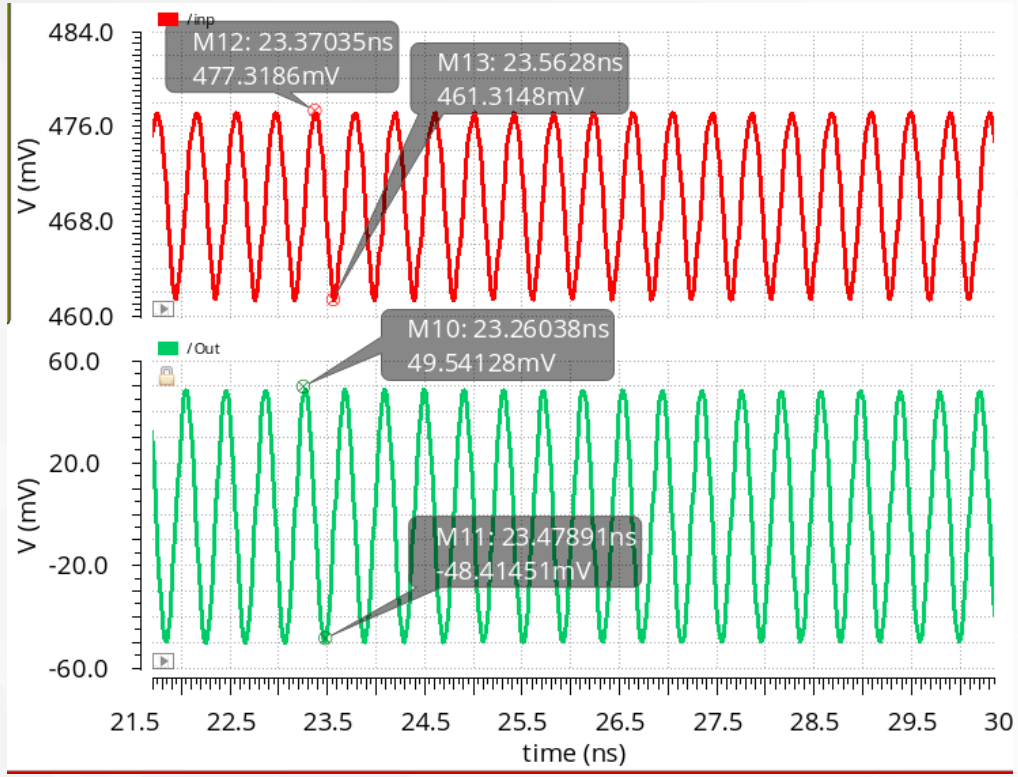

$$A_v = 20\log_{10}\left(\frac{(49.541 + 48.414)mV}{(477.318 - 461.314)mV}\right)$$

$$A_v = 16.3\ dB$$

S-Parameter Analysis

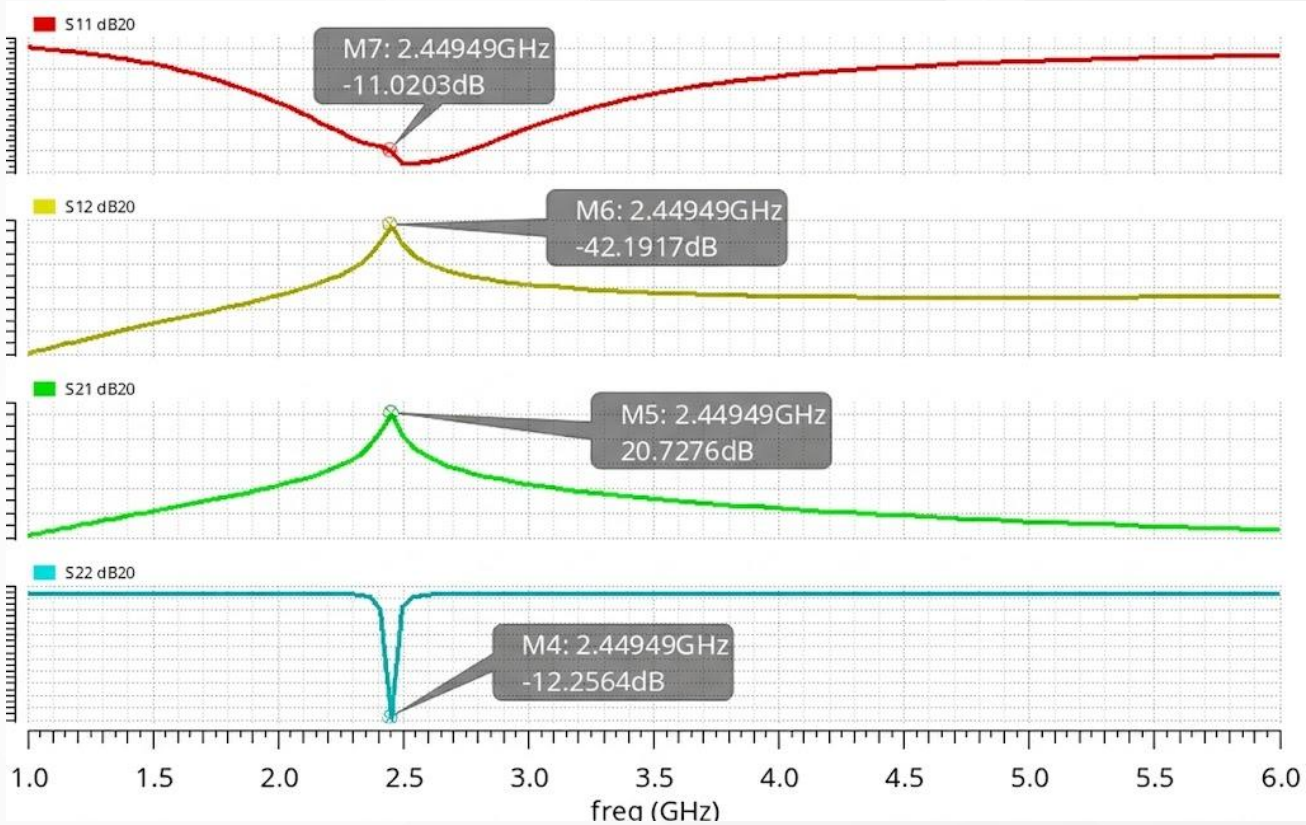

Suvom Karmakar
021 221 027

Low Noise Amplifier

Performance Summary:

Design Metric	Measurement	Simulation Result	Requirement
Input Return Loss	S11 at 2.45 GHz	−11.03 dB	≤−10 dB
Forward Gain	S21 at 2.45 GHz	20.72 dB	15 dB −20 dB
Maximum Gain	Gain at 2.45 GHz	23.47 dB	≥15 dB
Noise Figure	NF at 2.45 GHz	2.32 dB	<3.0 dB
Output Return Loss	S22 at 2.45 GHz	−12.25 dB	≤−10 dB
Reverse Isolation	S12 at 2.45 GHz	−42.19dB	≤−25 dB

Band Pass Filter

Schematic Design

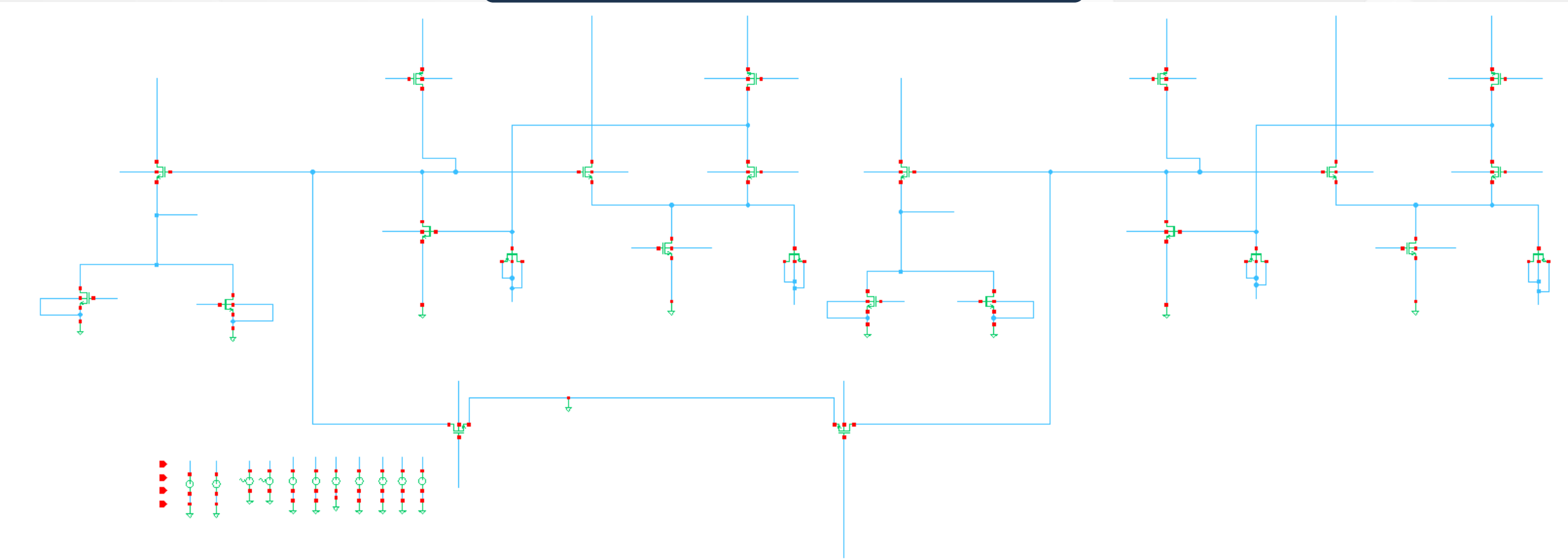

Power Consumption = 1.63mW

Tahman Hossain
021 221 099

Band Pass Filter

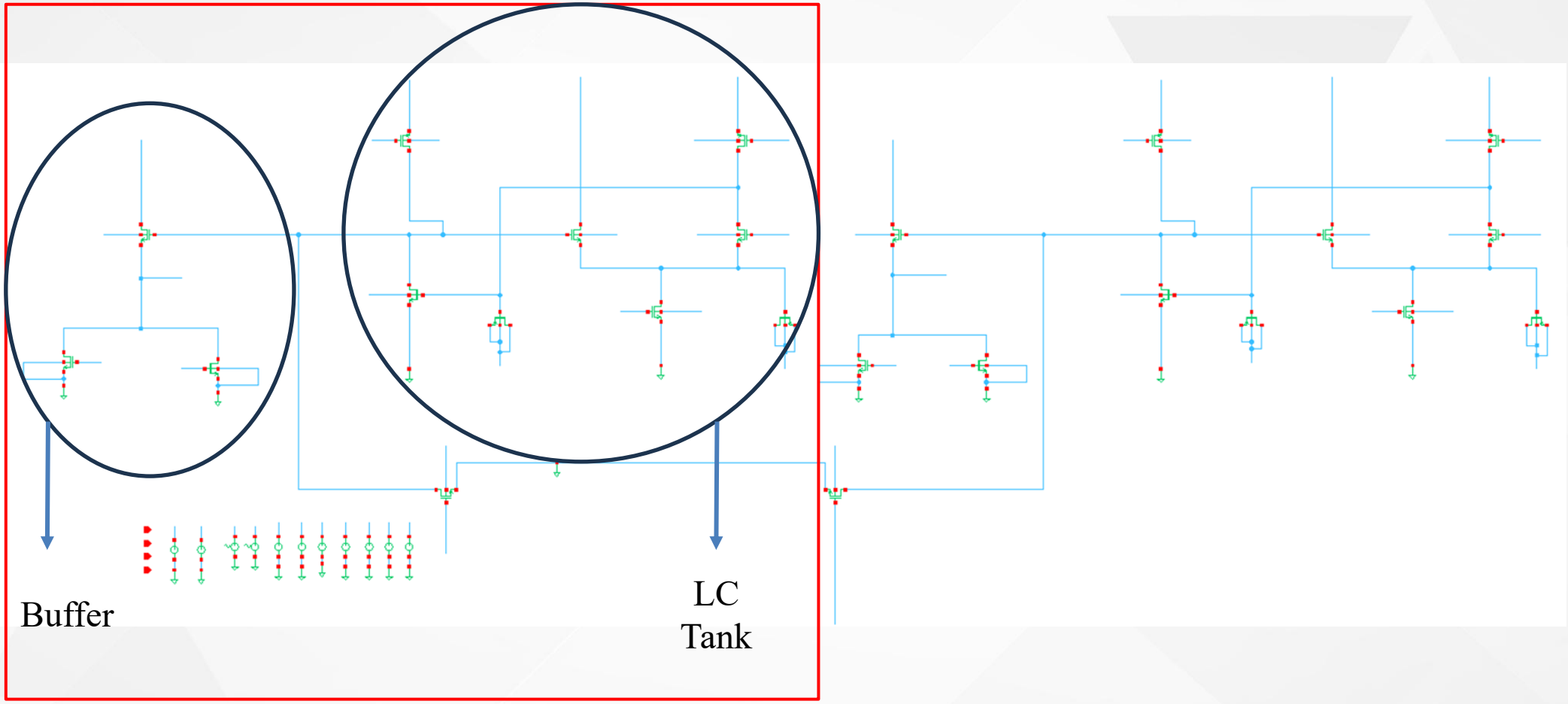

Half Circuit

Tahman Hossain
021 221 099

Band Pass Filter

Center Frequency

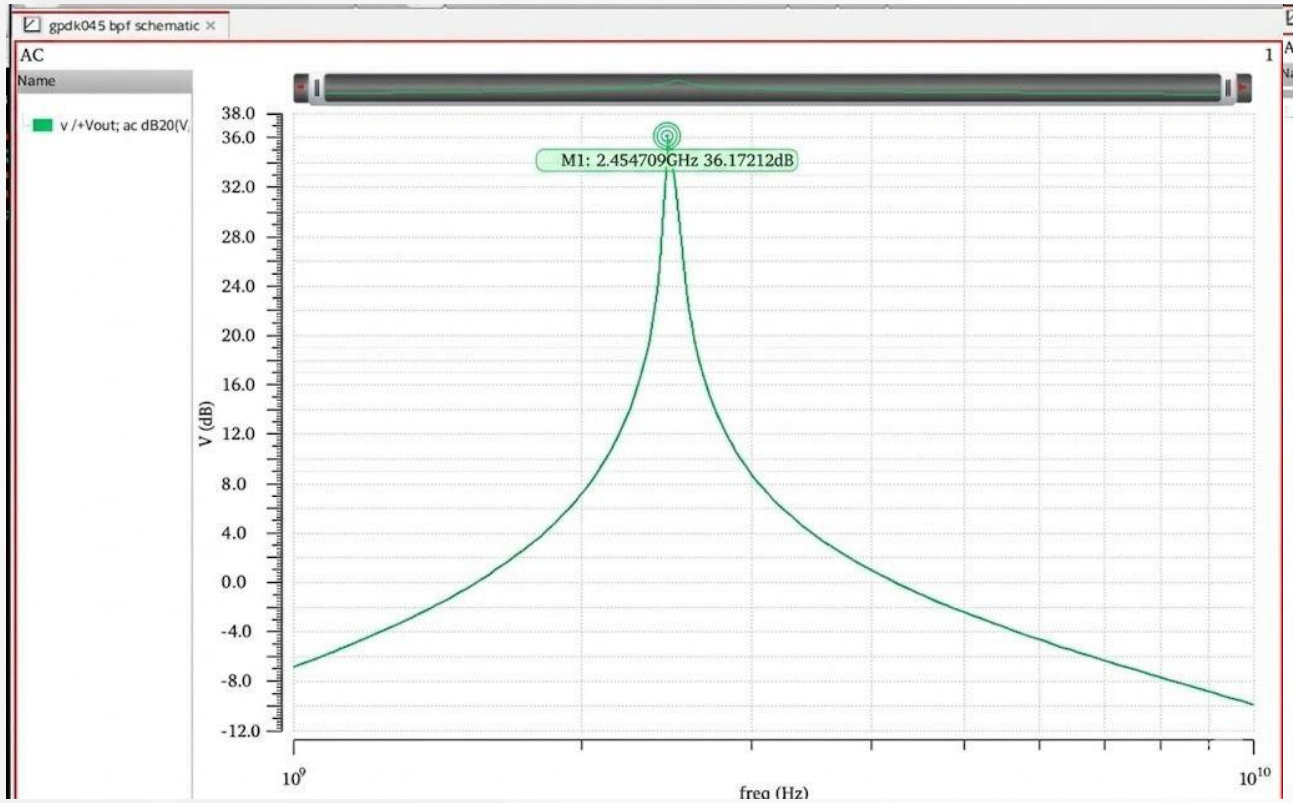

3 dB Point

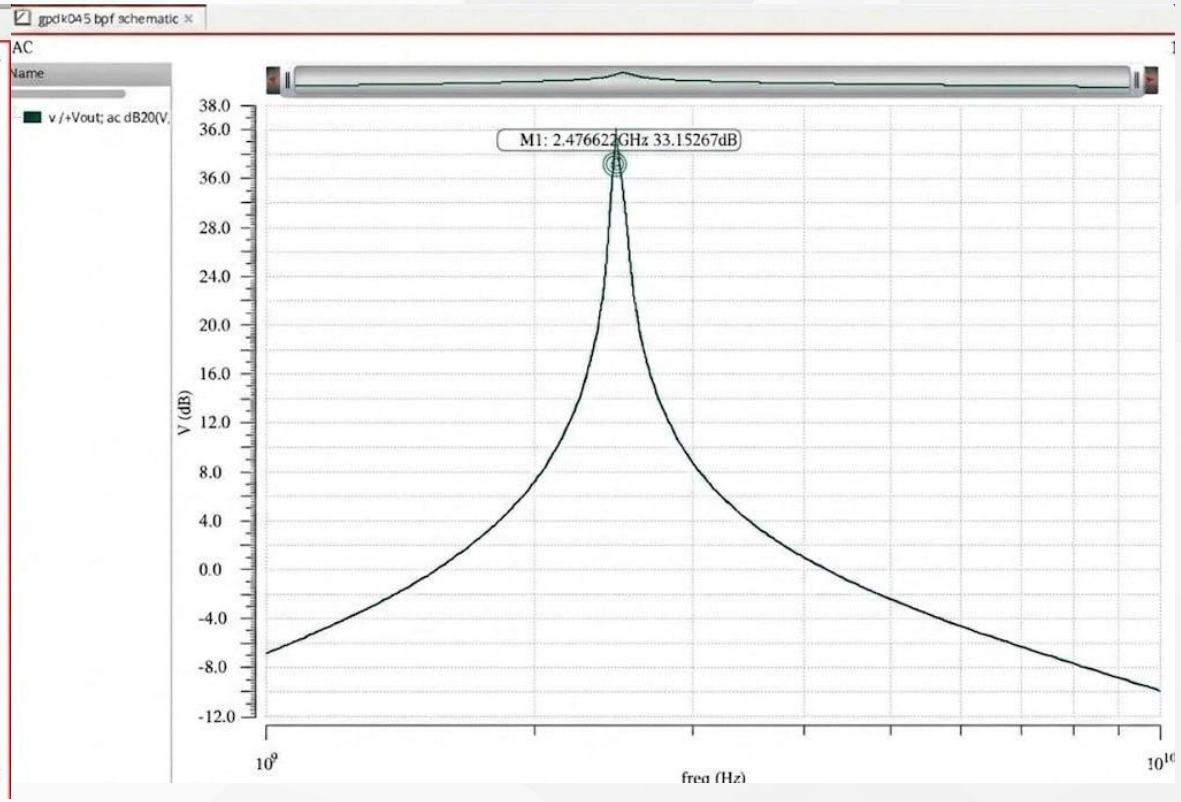

Band Pass Filter

Transient & DFT Analysis

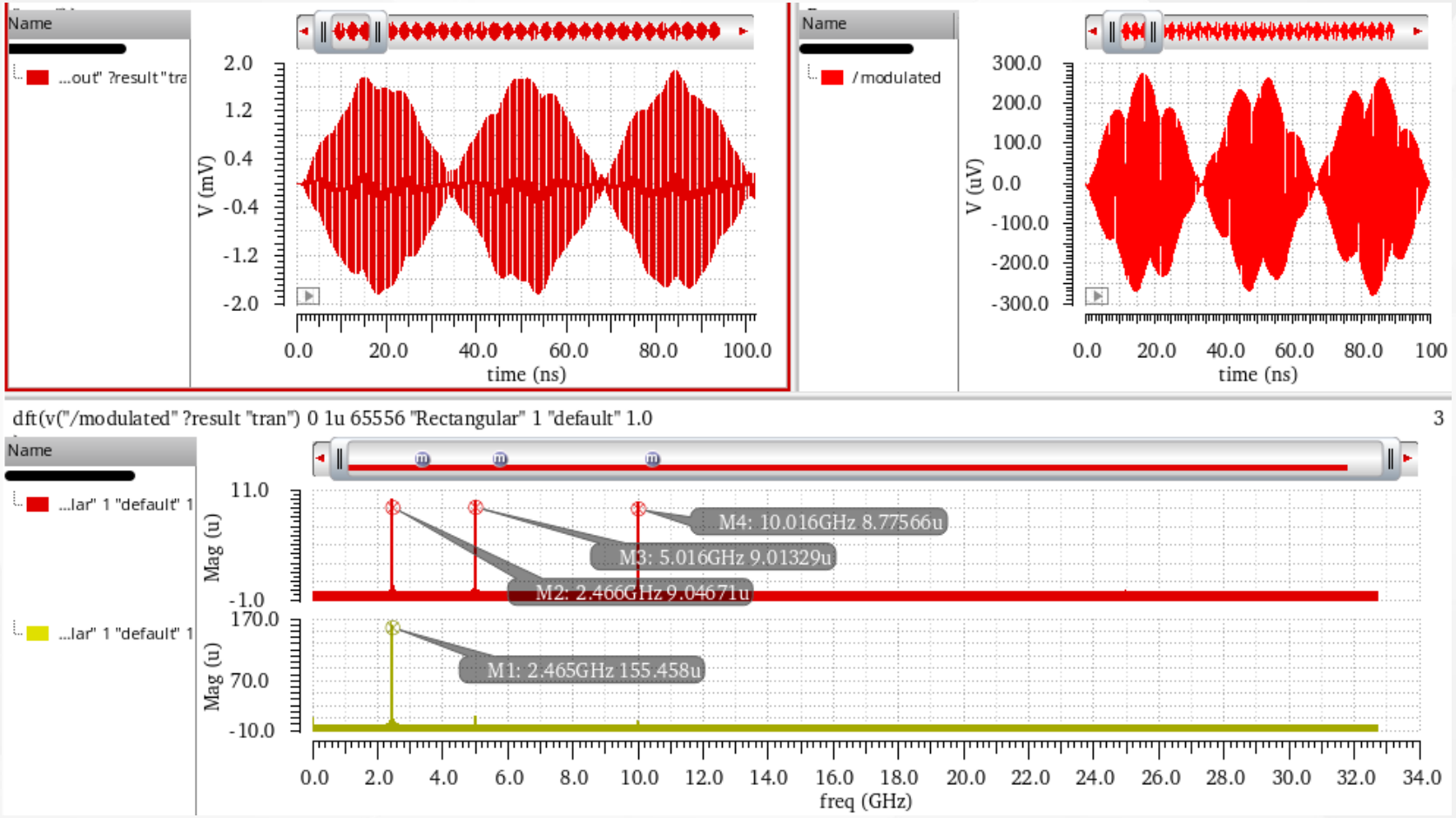

Tahman Hossain
021 221 099

RF Receiver

Integration of RF Blocks

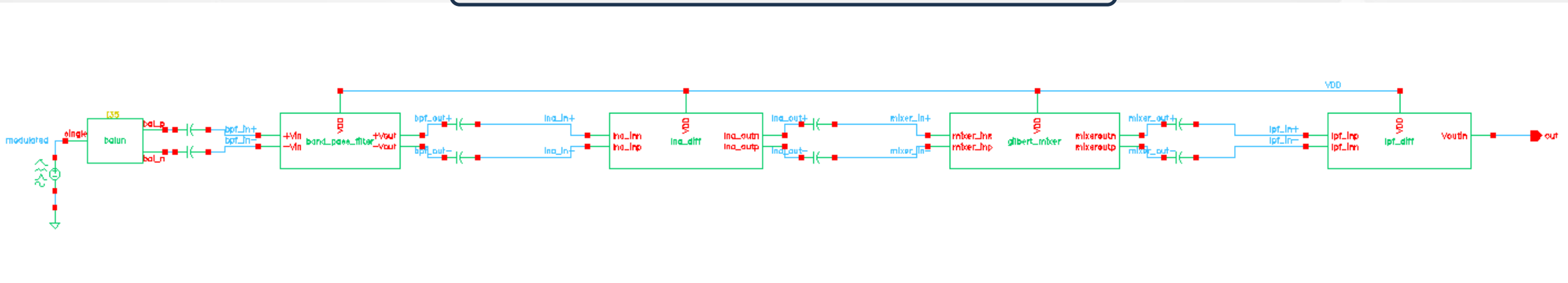

Uploading MATLAB Generated Modulation Signal

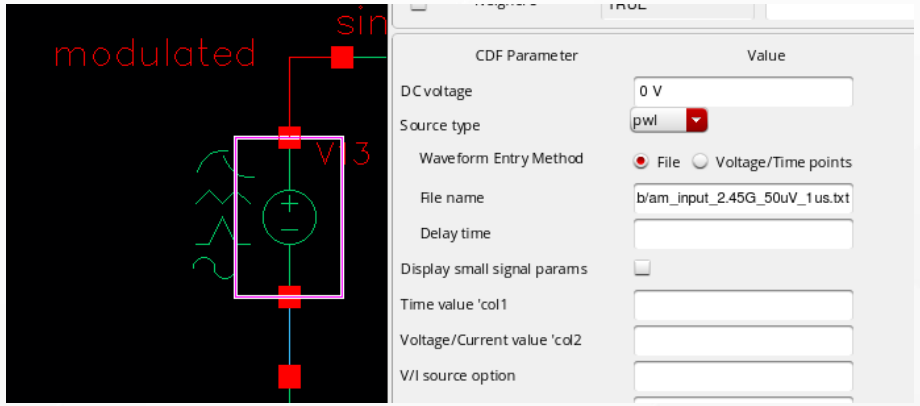

Tahman Hossain
021 221 099

RF Receiver

DSB-SC Transient analysis

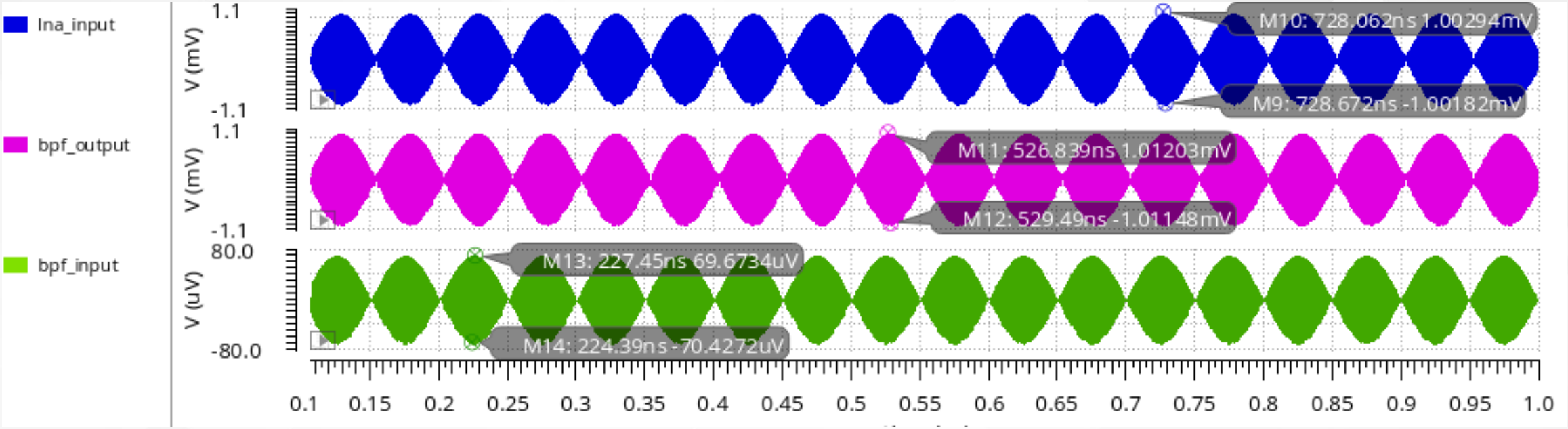

- Massage signal - 10MHz
- Carrier frequency - 2.45GHz
- Amplitude - 50uV

RF Receiver

DSB-SC Transient analysis (cont.)

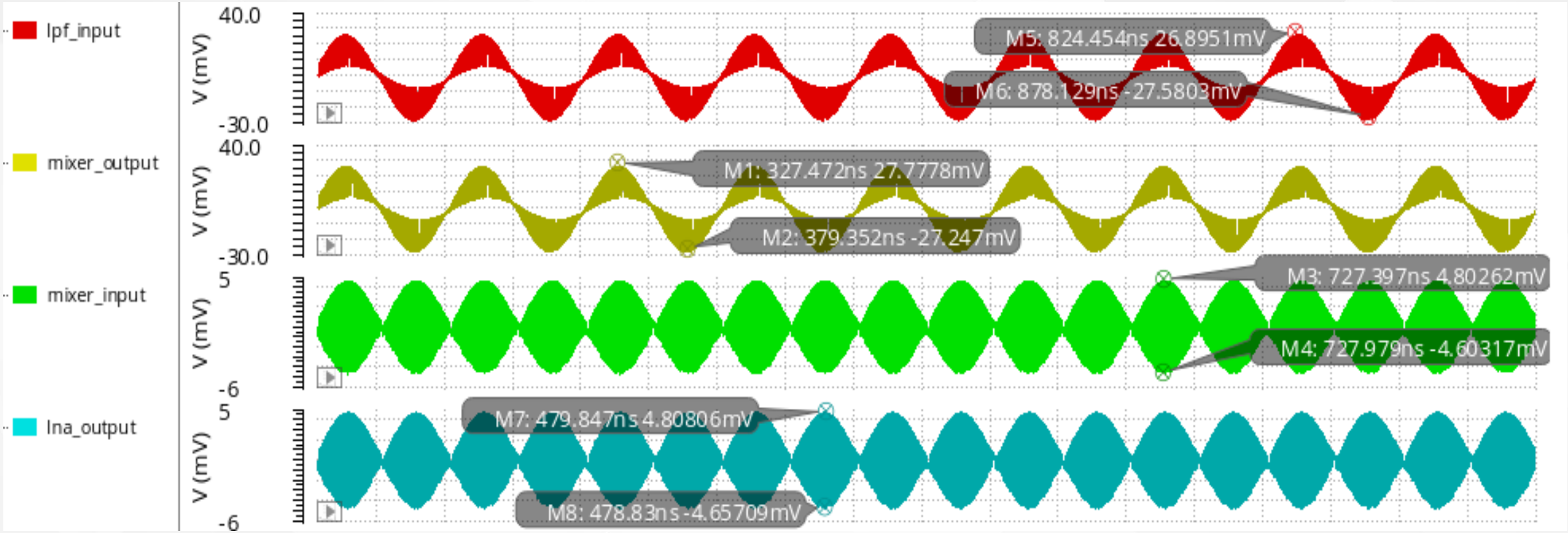

Sazzad Hossen
021 221 026

RF Receiver

DSB-SC Transient analysis (cont.)

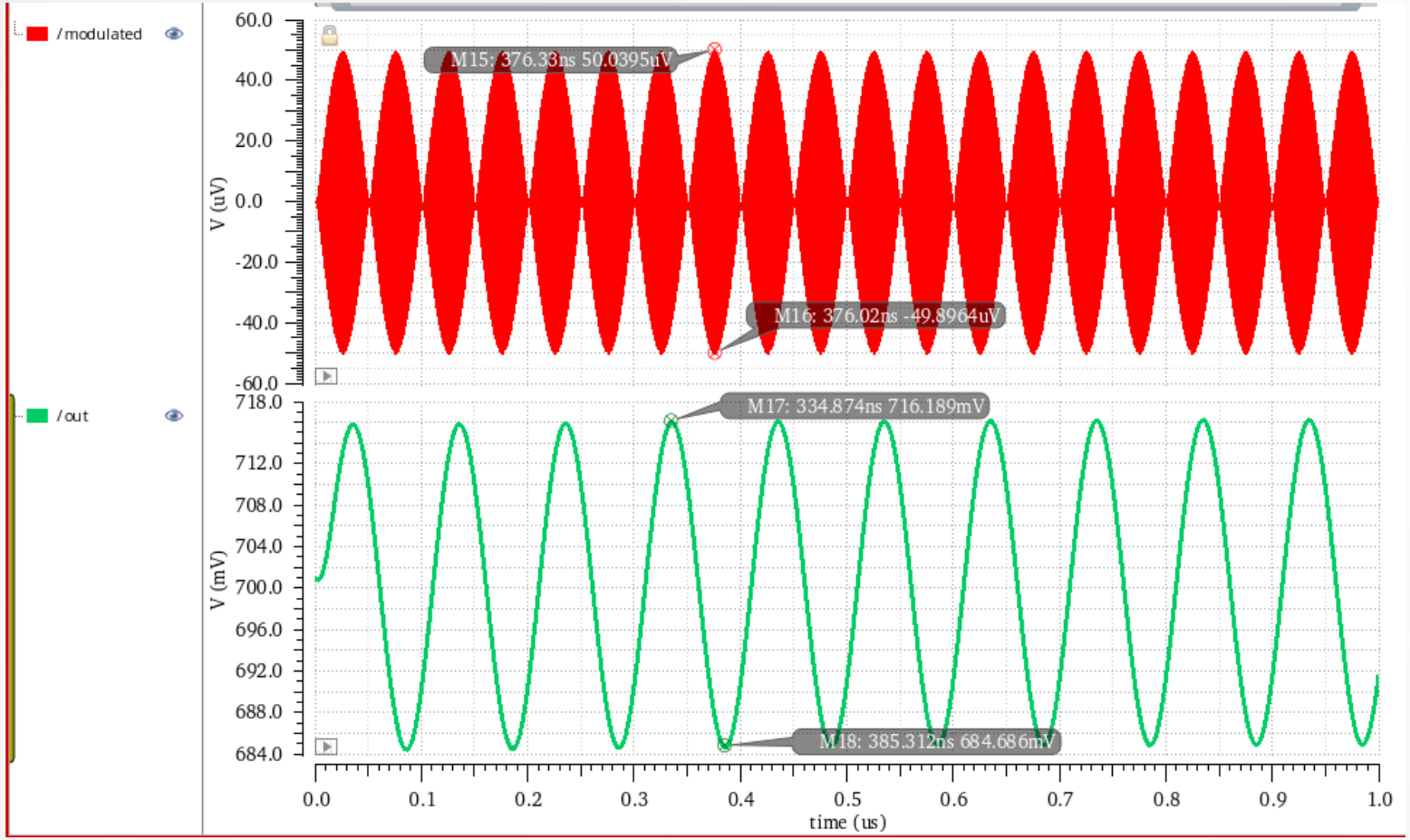

$$Av = \frac{V_{out}(peak_to_peak)}{V_{in}(peak_to_peak)}$$

$$= \frac{31.5\times10^{-3}}{100\times10^{-6}} = 320$$

A_v= 50 dB

RF Receiver

DSB-SC DFT Analysis

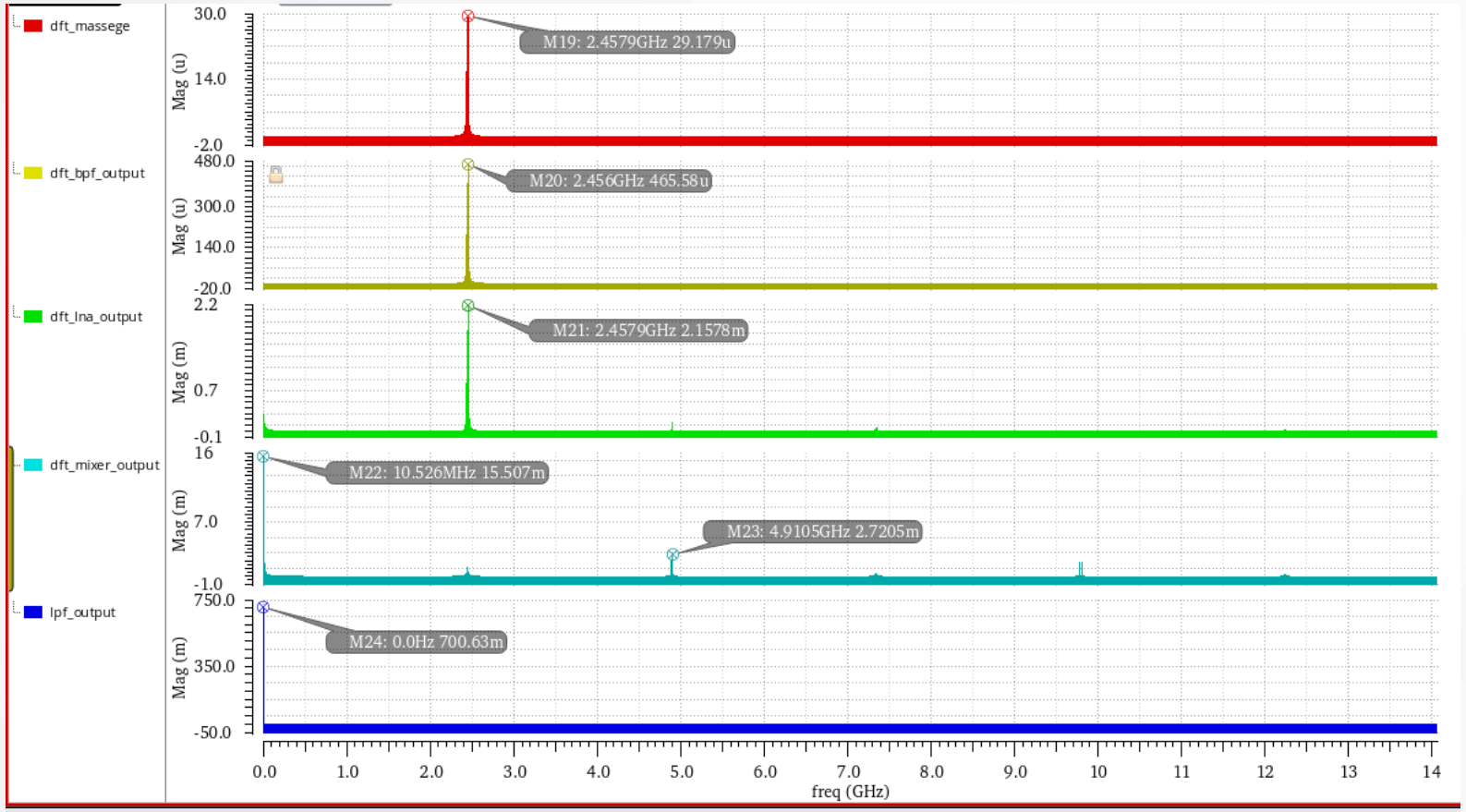

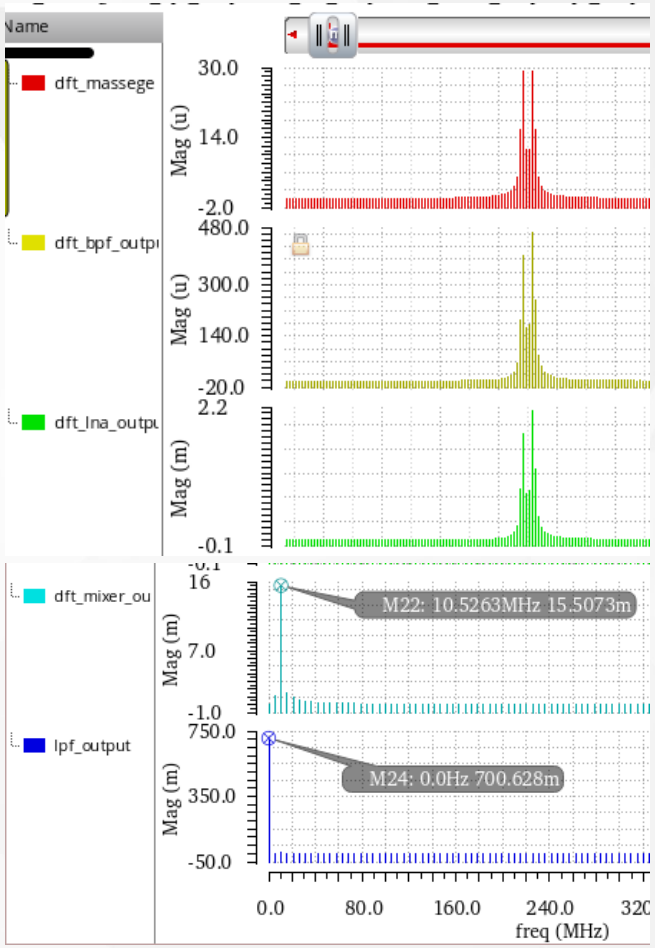

Sazzad Hossen
021 221 026

RF Receiver

PSD Analysis

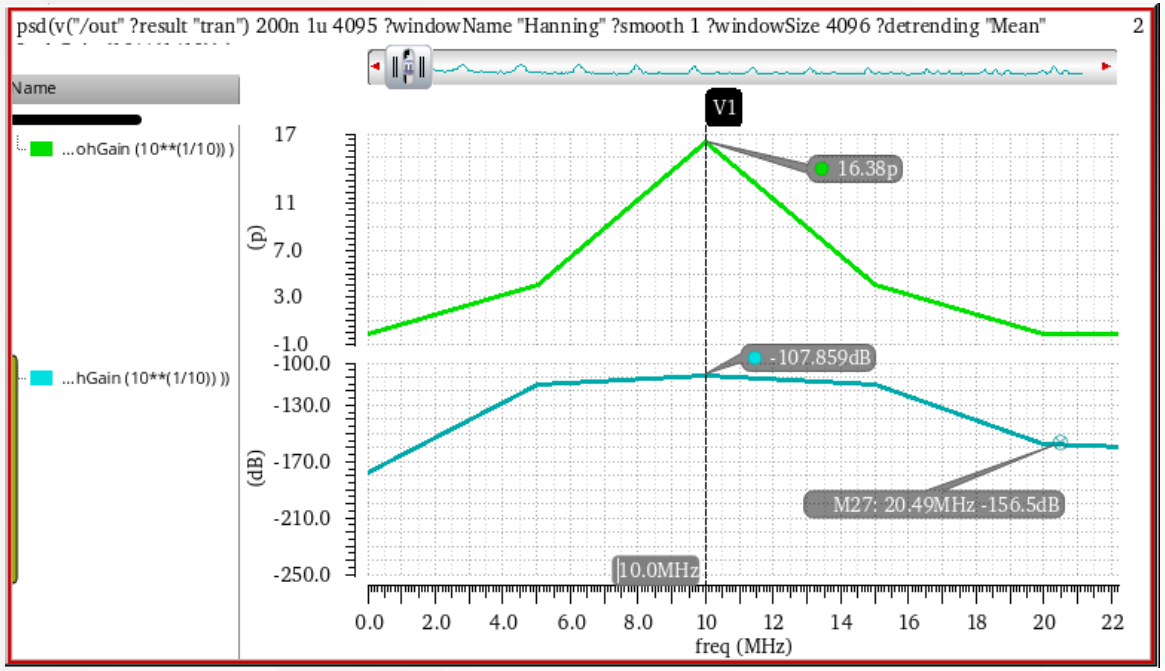

$$SNR_{dB} = P_{signal} - P_{noise}$$
$$SNR_{dB} = (107.85dB - 156.5\ dB) = 49\ dB$$

Linearity Analysis

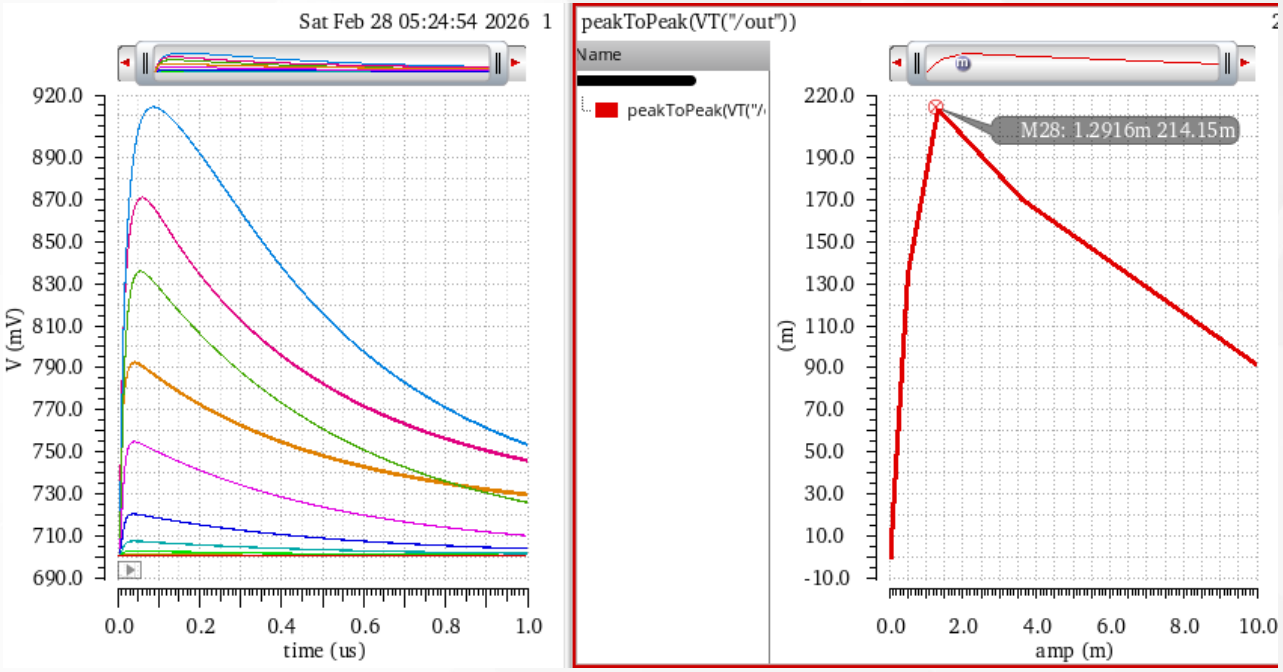

Linearity range : 1uV – 1.3mV

Sazzad Hossen
021 221 026

RF Receiver

FDM Transient Analysis

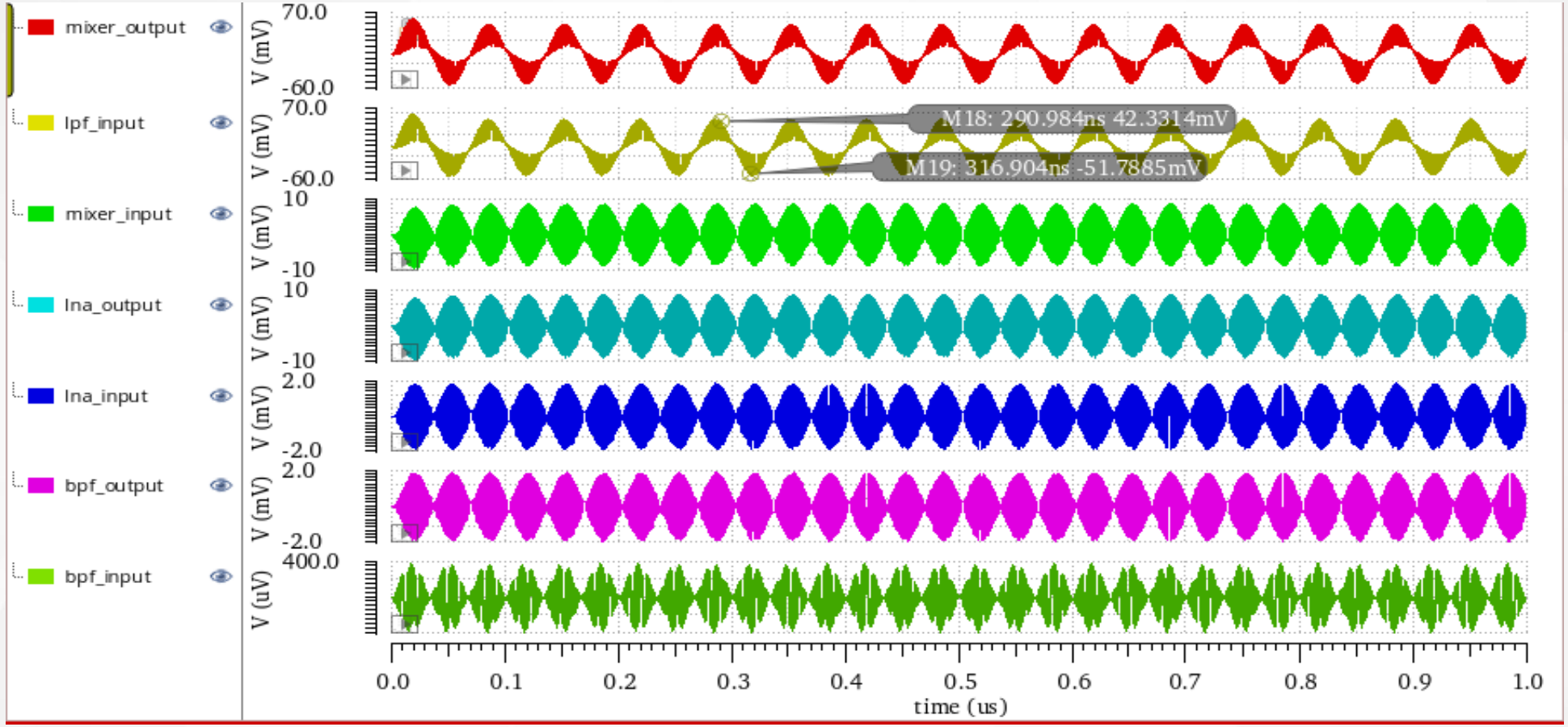

- Massage signal – 15MHz
- Carrier frequency – 2.45GHz, 5GHz, 10GHz
- Amplitude – 100uV

Sazzad Hossen
021 221 026

RF Receiver

FDM DFT Analysis

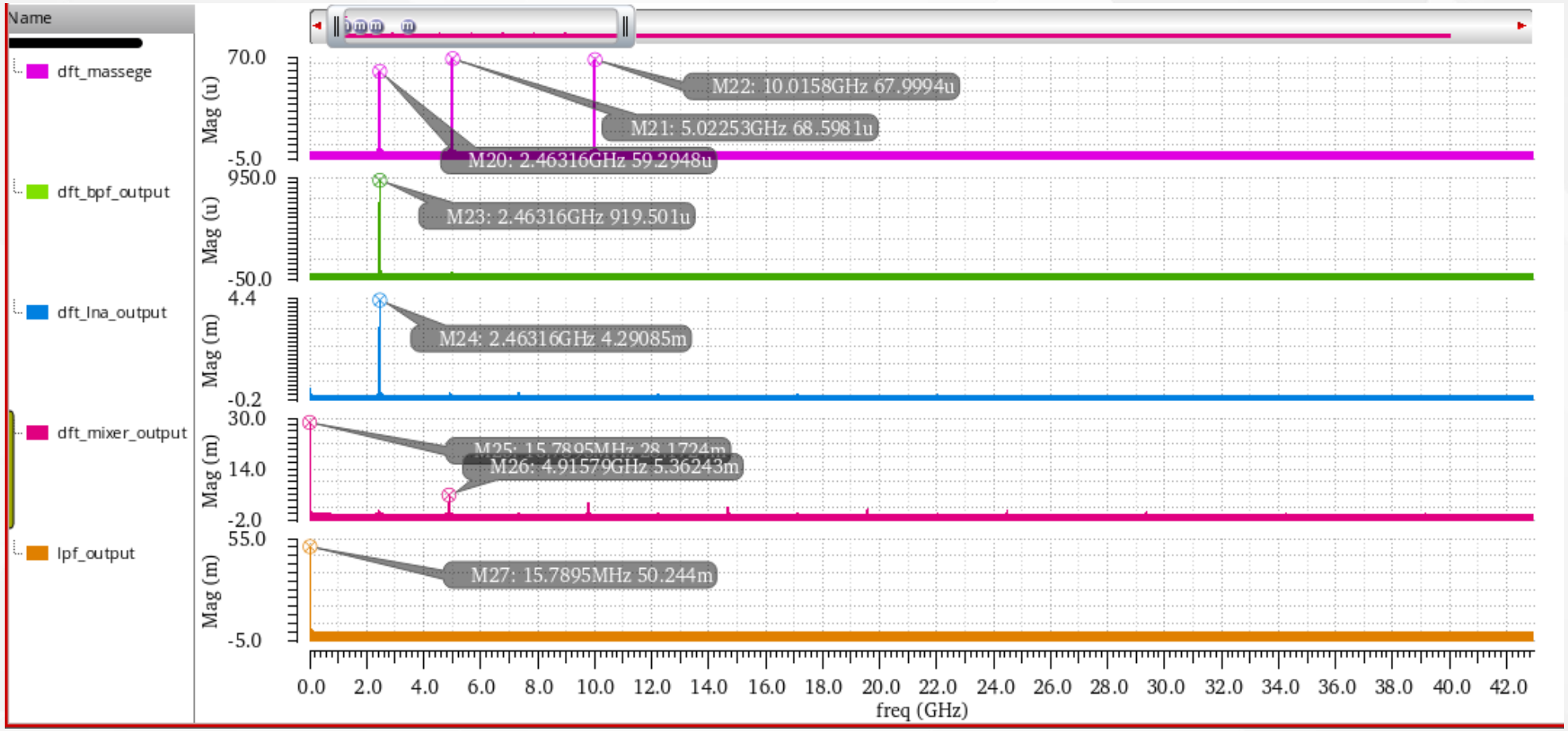

Sazzad Hossen
021 221 026

RF Receiver

FDM Transient Analysis (cont.)

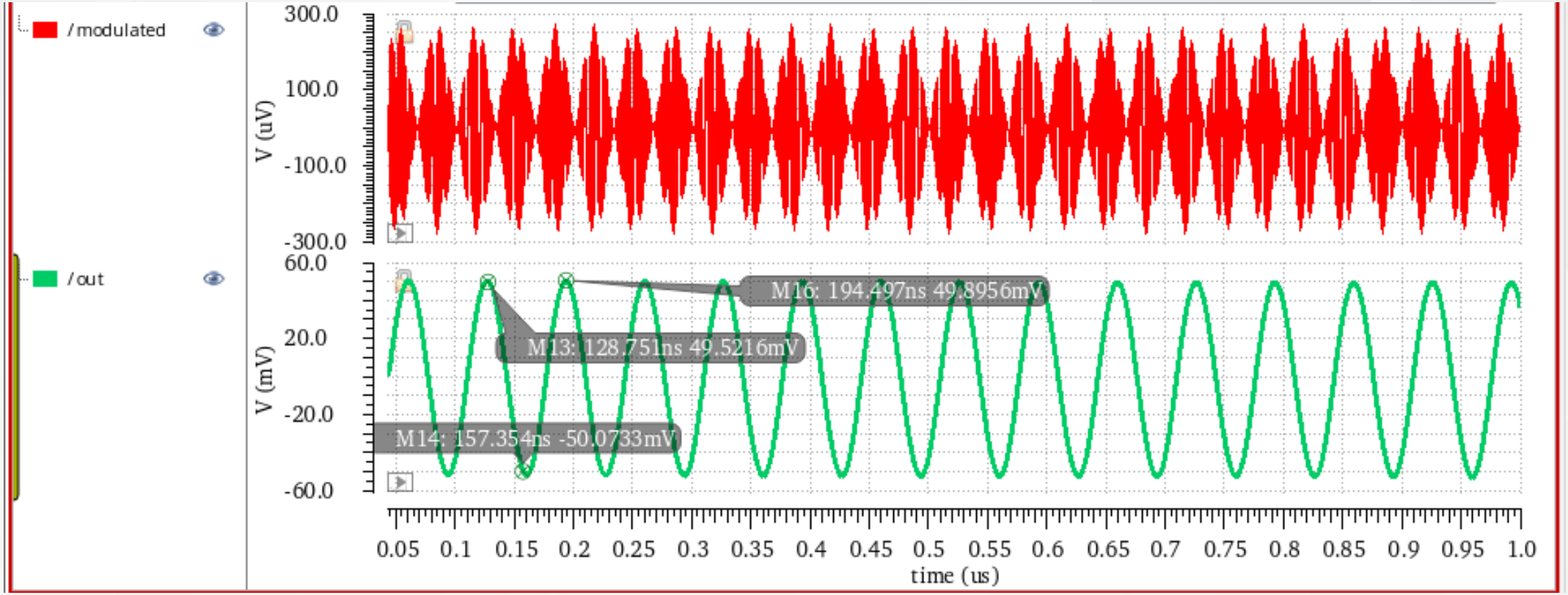

RF Receiver

Output Summary

	THD	SNR
6mW	1.3%	49 dB

Future Direction

Integration of Advanced Blocks

↓

Physical Layout Design

↓

Further Power Optimization

Sazzad Hossen
021 221 026

RF Receiver

I/Q (In-phase & Quadrature) Structure

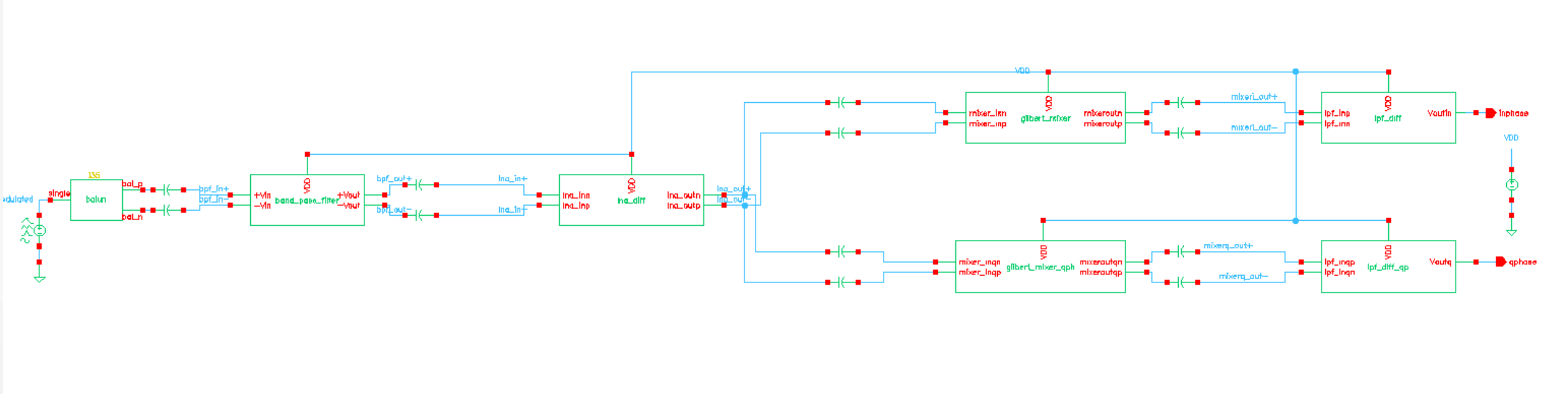

Power Consumption of 8.79mW

Sazzad Hossen
021 221 026

RF Receiver

Single Tone Test

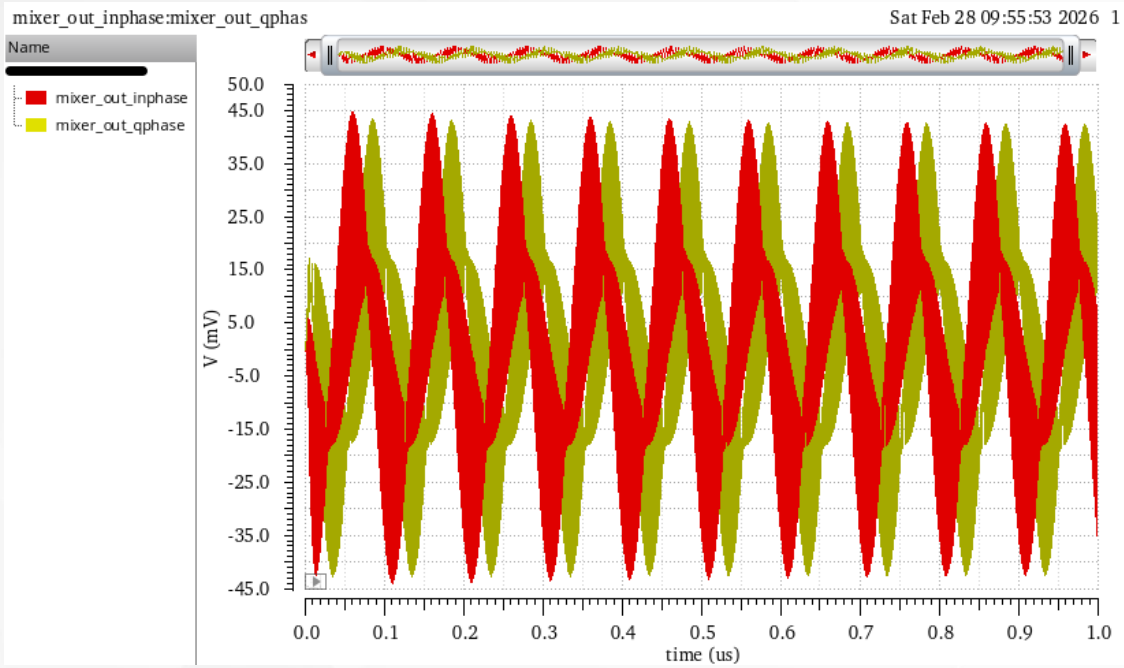

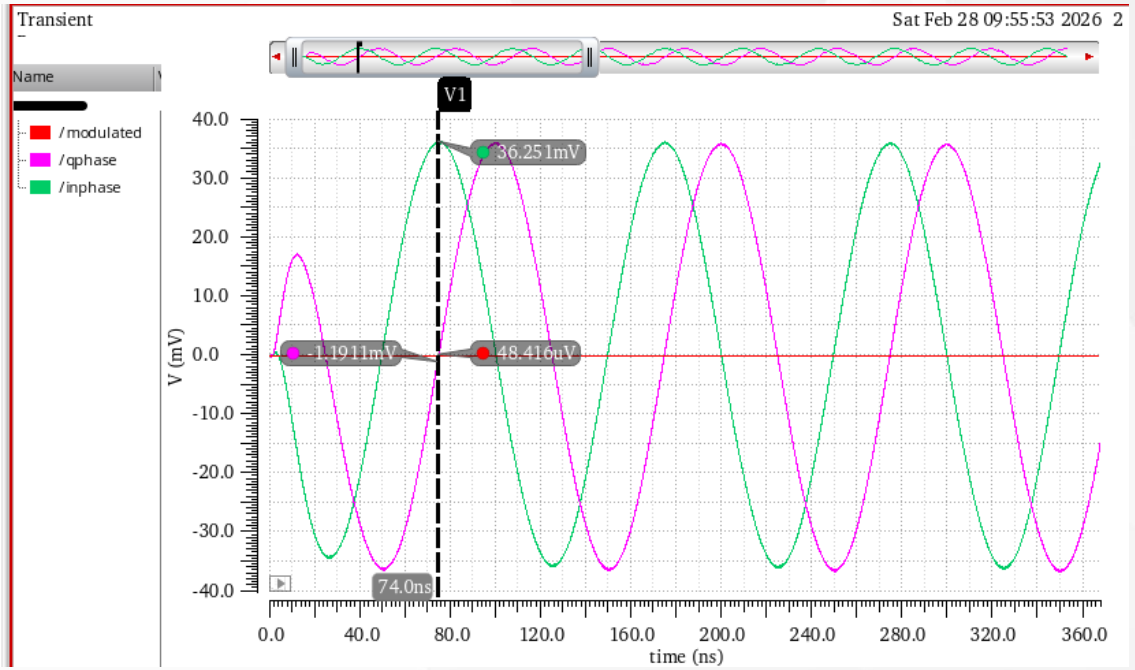

Sazzad Hossen
021 221 026

RF Receiver

Lissajous pattern

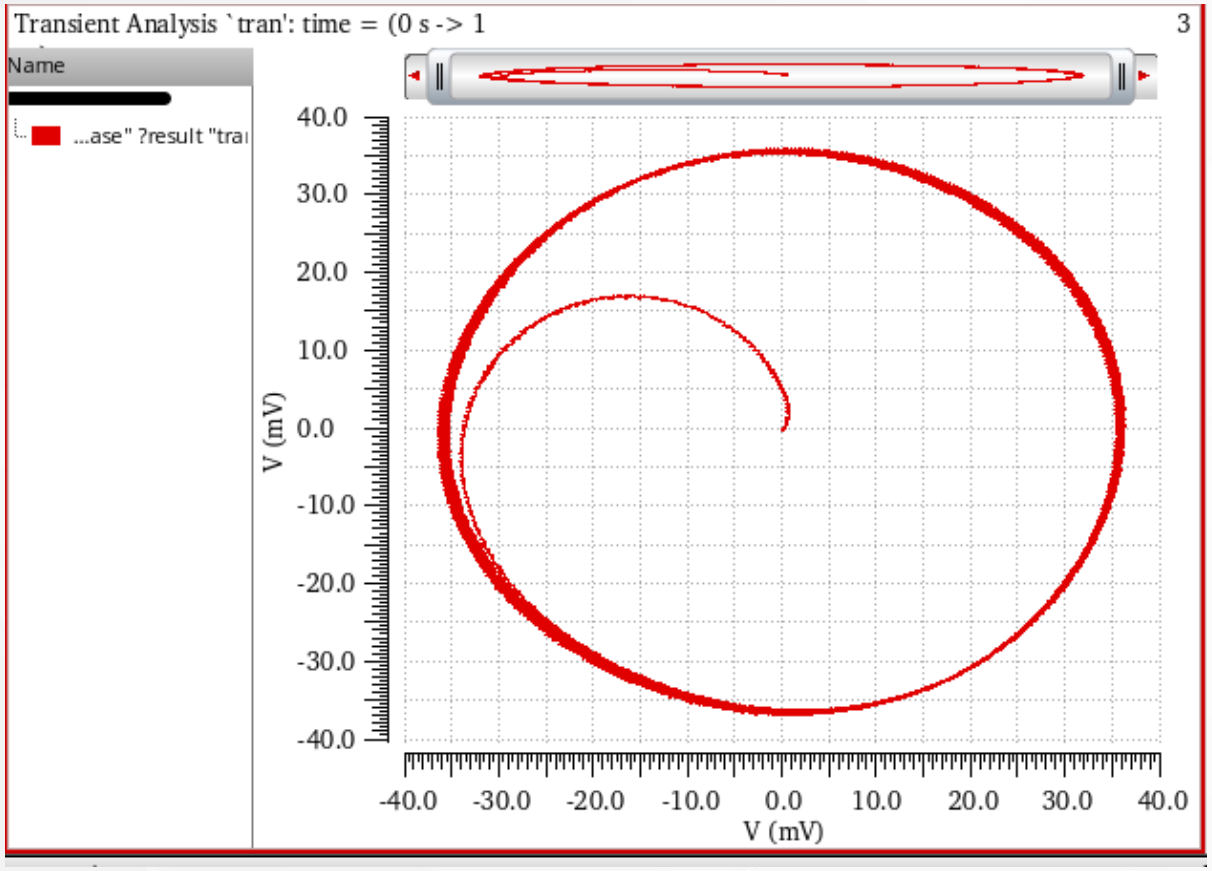

- The perfect circular Lissajous pattern confirms 0 dB gain mismatch and 0 phase error between the I and Q channels.

Project Attributes

Program Outcomes (POs)

POs

PO2: Problem Analysis

PO3: Design/Development of Solutions

PO4: Investigation

PO5: Modern Tool Usage

PO6: Engineer and Society

Knowledge Profile (K)

K's

- K01
- K03
- K04
- K05
- K08

Sustainability & SDG Alignment

SDG

SDG 4 Quality Education

SDG 7 Affordable and Clean Energy

SDG 9 Industry, Innovation, and Infrastructure

SDG 12 Responsible Consumption and Production

Sazzad Hossen
021 221 026

Communication & Co-ordination

Weekly Meetings

Regular check-ins with supervisors to discuss progress, address challenges, and plan next steps.

Work Division

Specific responsibilities for BPF, LNA, Mixer, and LPF design, with cross-support for testing and integration.

Documentation

Comprehensive technical reports and design logs to ensure knowledge transfer and traceability.

Key Takeaways

- Robust RF receiver design for ISM band applications.
- Strong alignment with engineering program outcomes and knowledge profiles.

Sazzad Hossen
021 221 026

Comparison Table

Category	Parameter	[1]	[2]	[3]	[4]	[5]	[6]	This Work
Process	Technology (nm)	-	180	600	180	180	40	45
	Supply Voltage (V)	-	1.5	3	1.8	1.5	1.1	1.2
System	Frequency (GHz)	2.4	24	2.4	24	2.42	-	2.45
	Total Gain (dB)	35	14.5	12 - 20	25	-	-	400
	Total Power (mW)	40	45	100	25.2	-	-	6.261
LNA	Gain (dB)	-	15	14	14.7	-	-	23.03
	NF (dB)	-	6	3.5	4.3	-	-	2.4
	Topology	-	Common Gate	Common Source Cascode	Transformer-Coupled	-	-	Common Source Inductive Degeneration
Mixer	Conv. Gain (dB)	-	12.5	10	8.7	-	-	
	Type	-	Active Gilbert Cell	Active Gilbert Cell	Current-Bleeding Mixer	-	-	Active Gilbert Cell
BPF	Bandwidth (MHz)	-	-	-	-	38	-	20-100 (Tunable)
	Power Consumption (mW)	-	-	-	-	1.3 (Single Stage)	-	1.63 (Differential)
LPF	Bandwidth (MHz)	-	-	-	-	-	20	20
	Power Consumption (mW)	-	-	-	-	-	2	0.2

Sazzad Hossen
021 221 026

Conclusion

- ✓ 2.45 GHz CMOS RF Receiver Design (45 nm).
- ✓ Reliable wireless application.
- ✓ Effective weak-signal restoration.
- ✓ Low power consumption (6.261 mW).
- ✓ Gain: 320 & THD: 1.319%
- ✓ Scalable for advanced modulation.

Thank You

Any Question?

Receiver Design

AM (Transient analysis)

Massage signal – 5MHz
Carrier frequency – 2.45GHz
Amplitude – 50uV

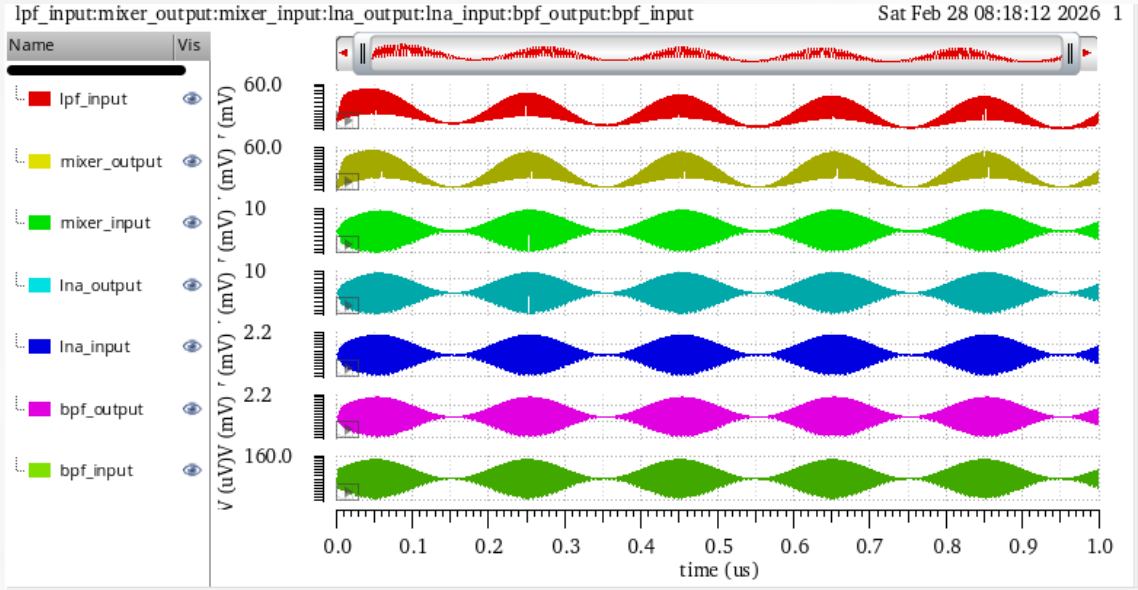

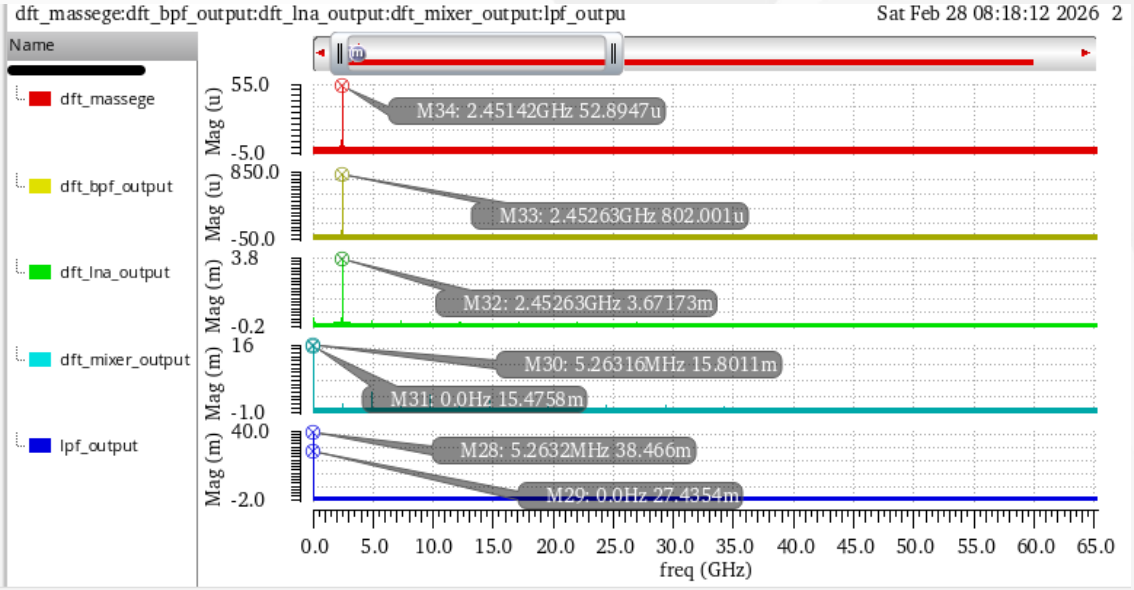

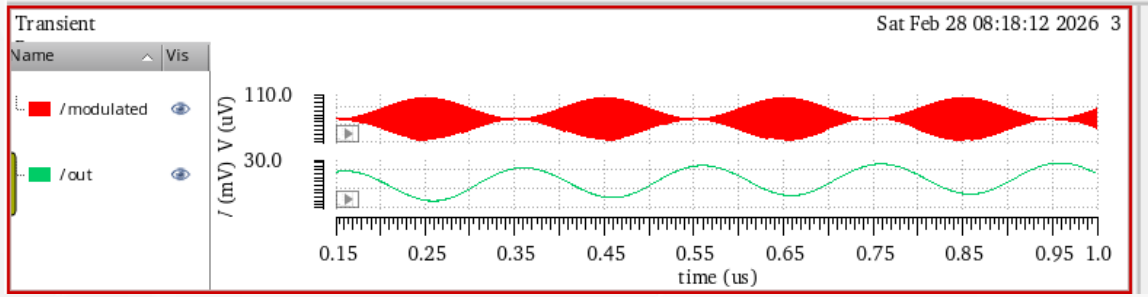

Receiver Design

QPSK Transient Analysis

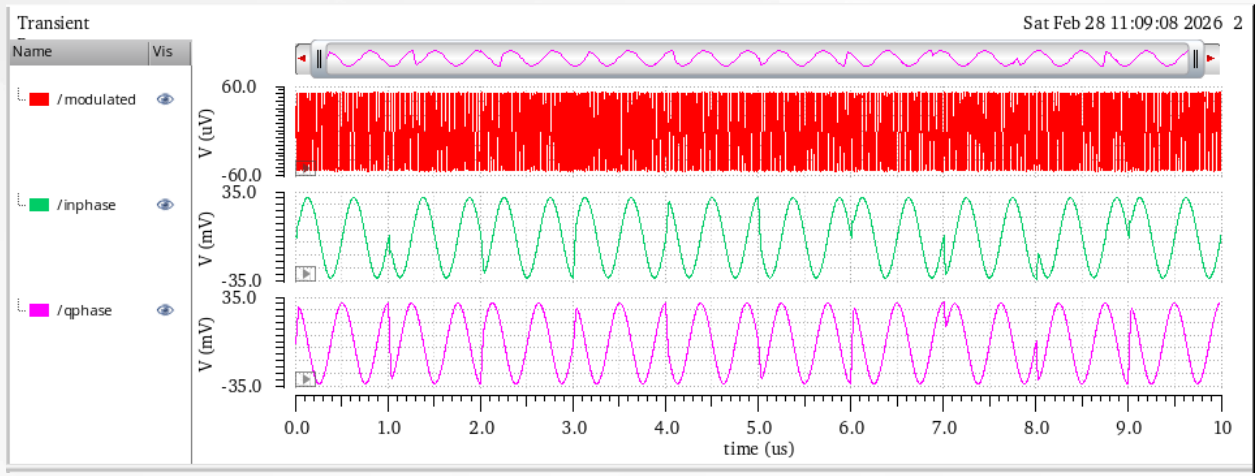

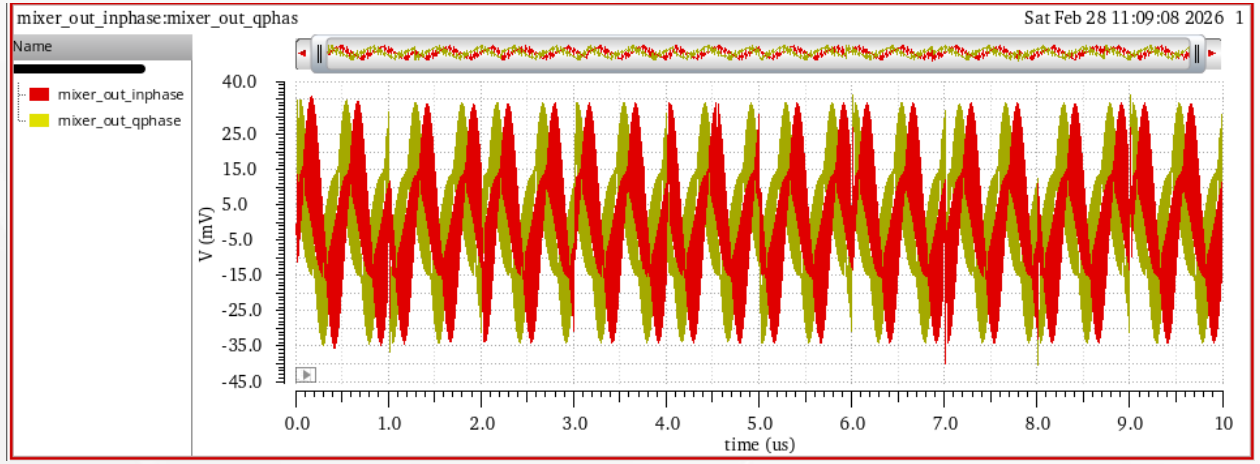

Lissajous pattern

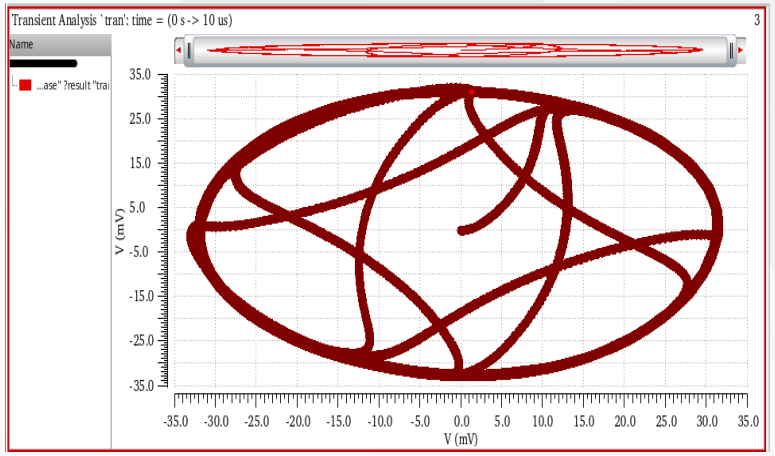

Eye Diagram

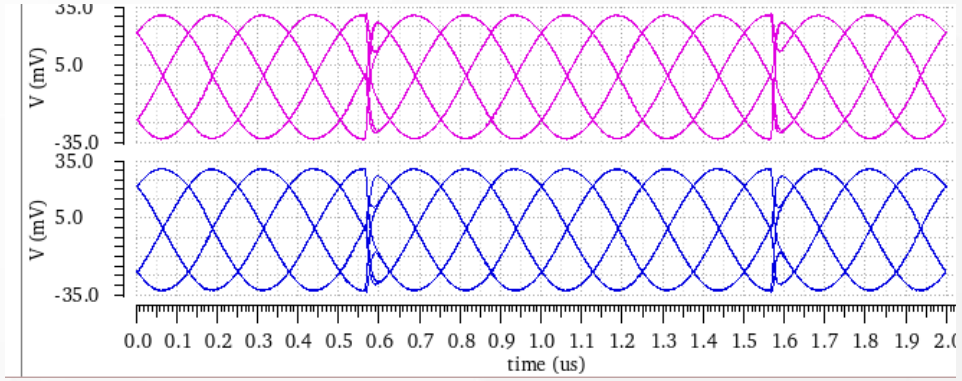

Mixer Design

Mixer schematic with Impedance matching

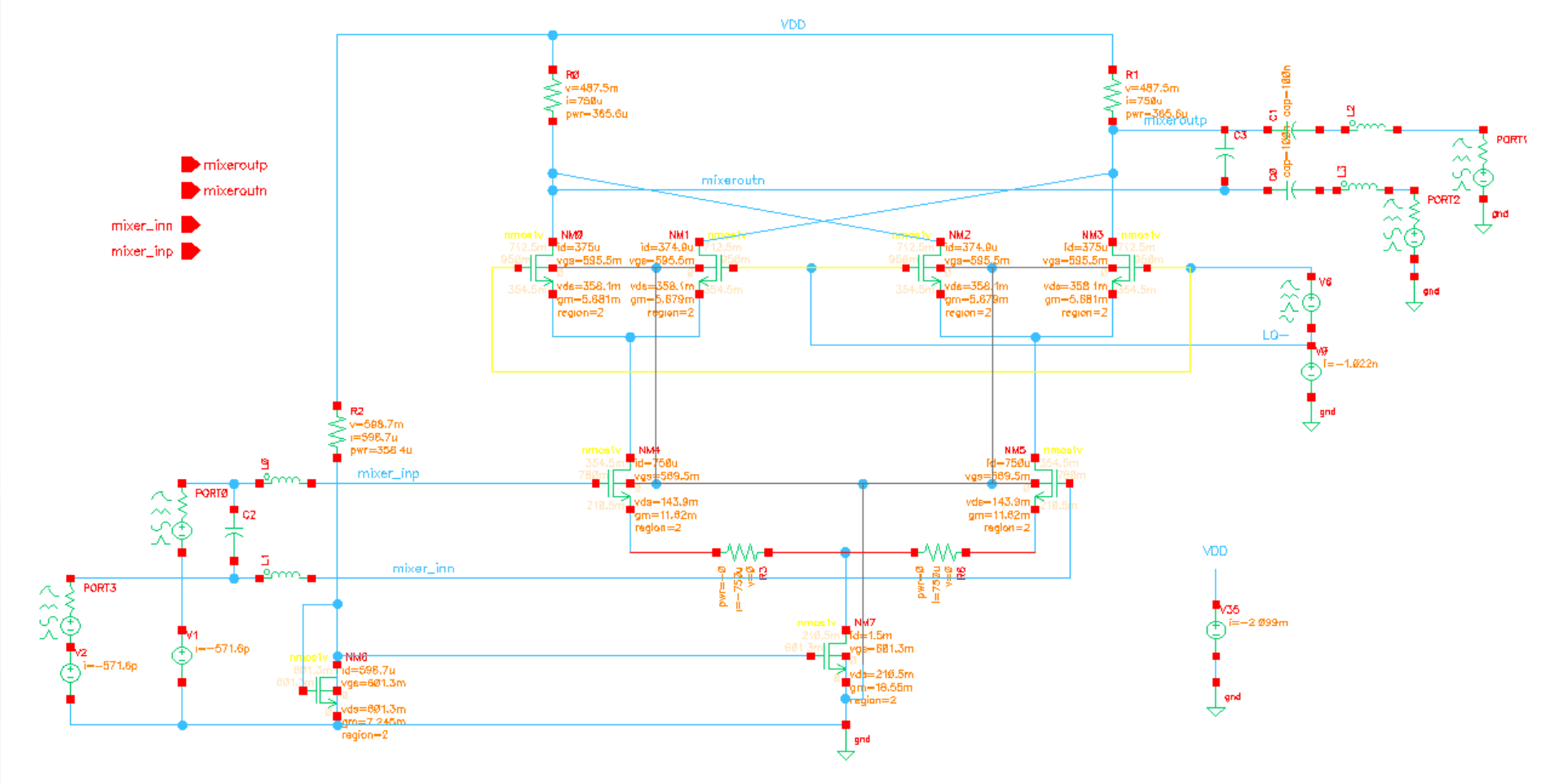

Mixer Design

Voltage Conversion Gain Vs. LO Signal Power

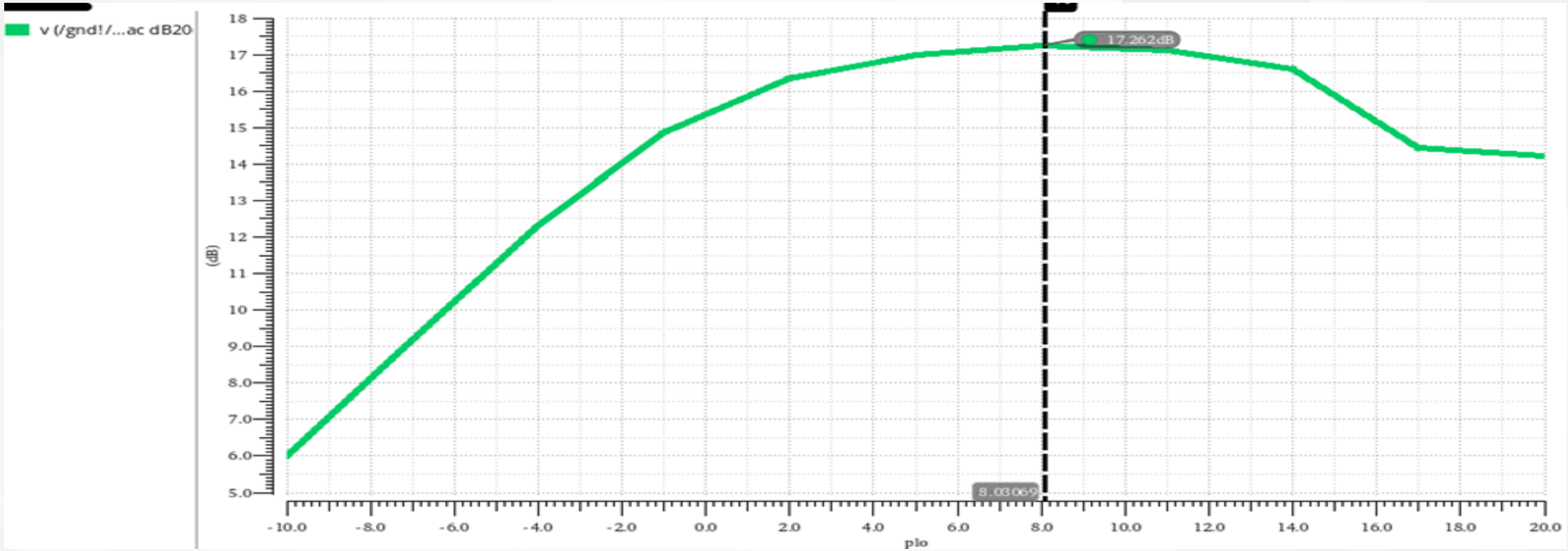

Mixer Design

Mixer S- Parameter Analysis

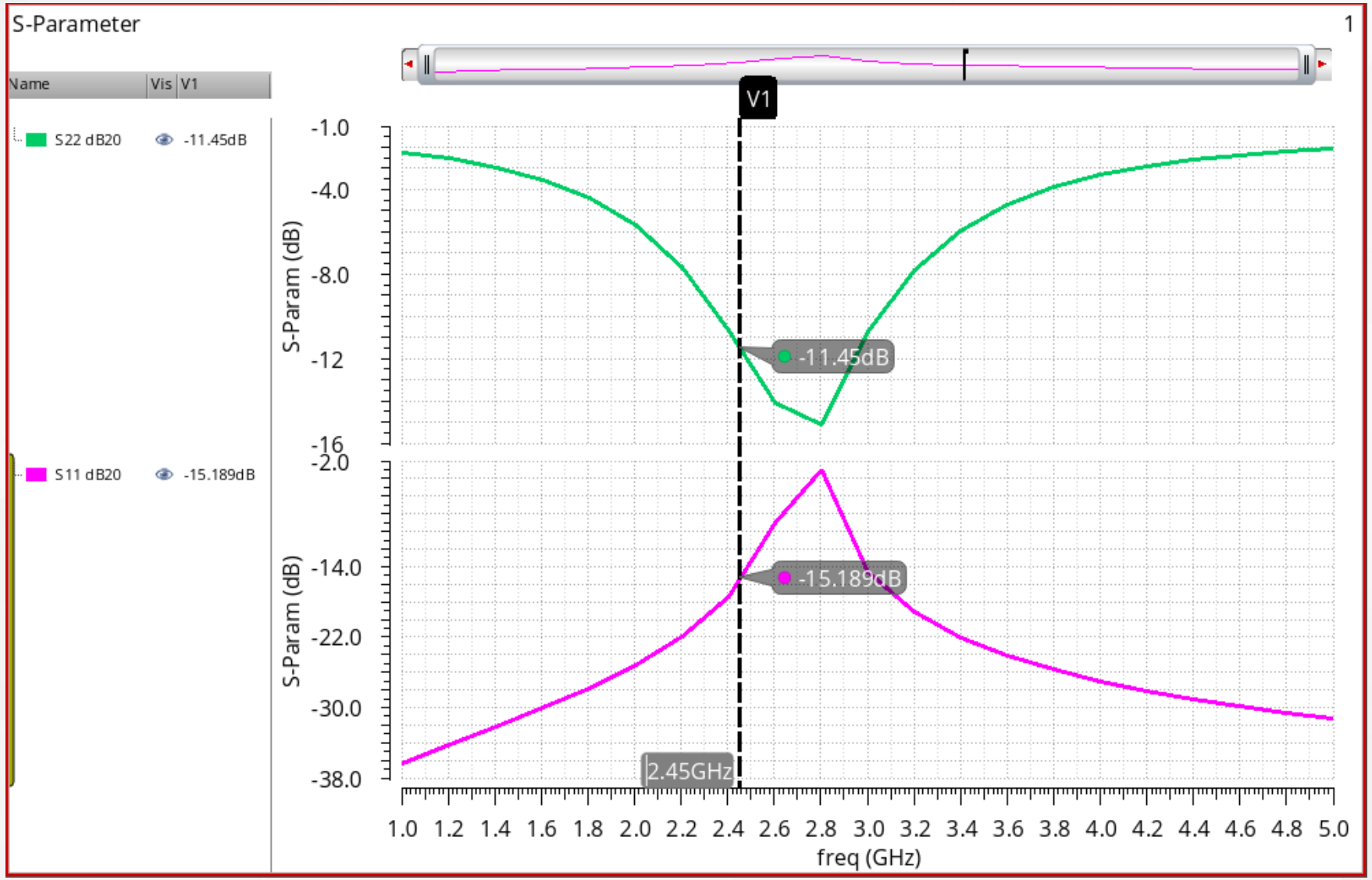

Receiver Design

Before Impedance Matching

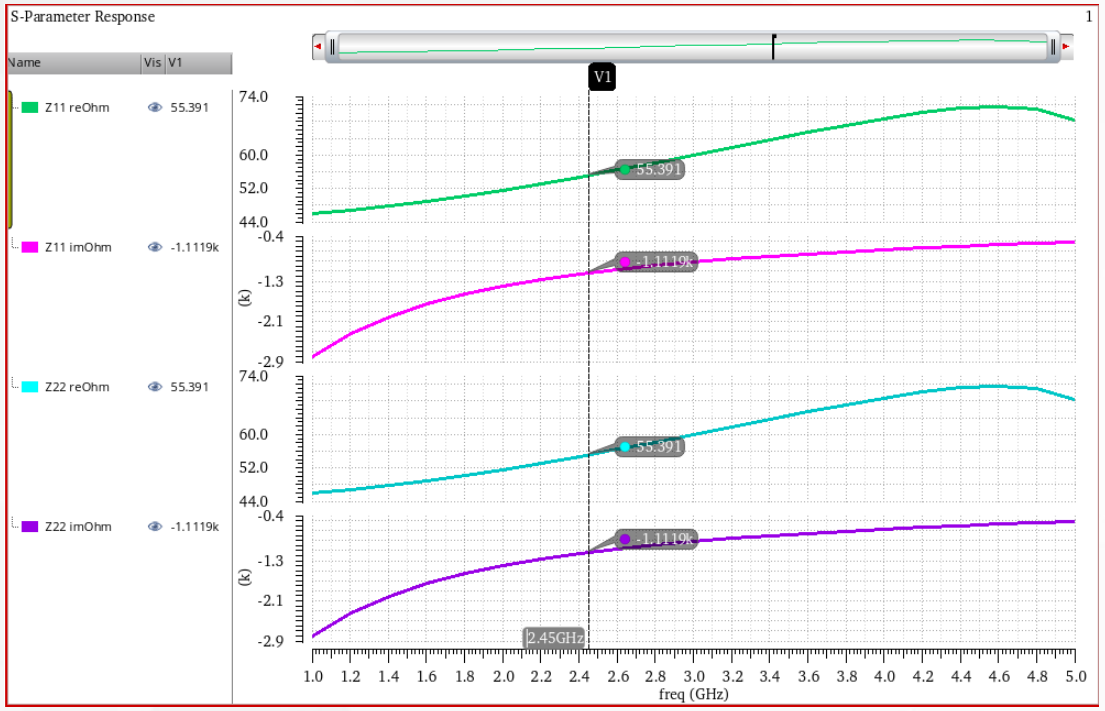

After Impedance Matching

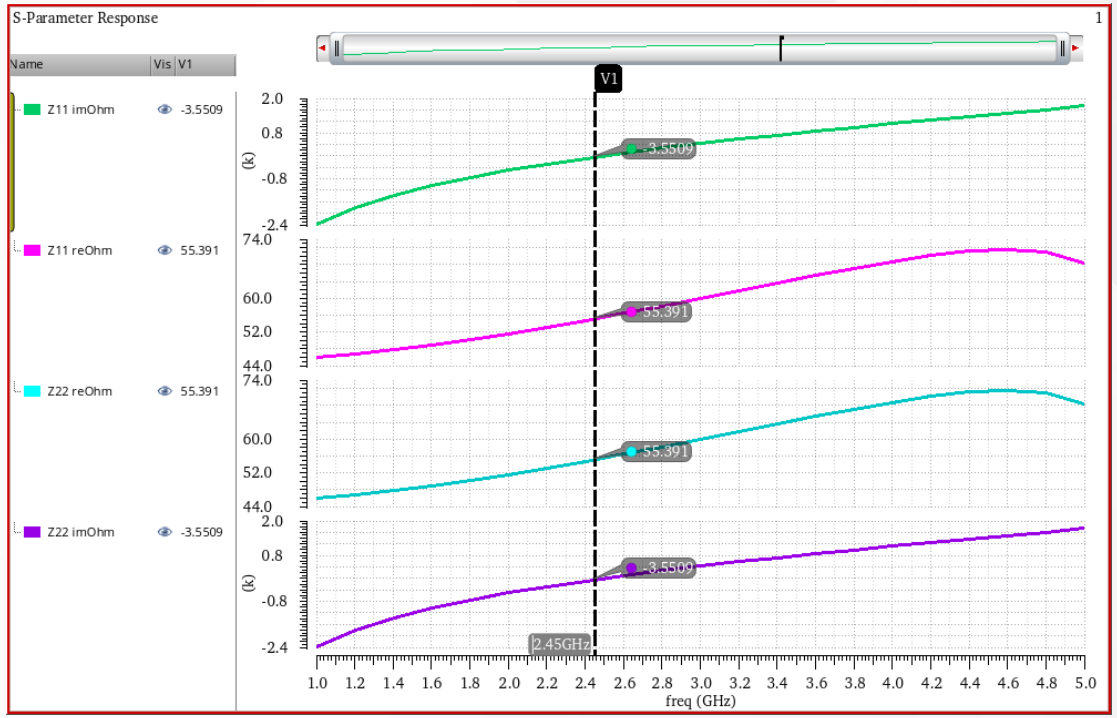

LNA Design

Differential LNA

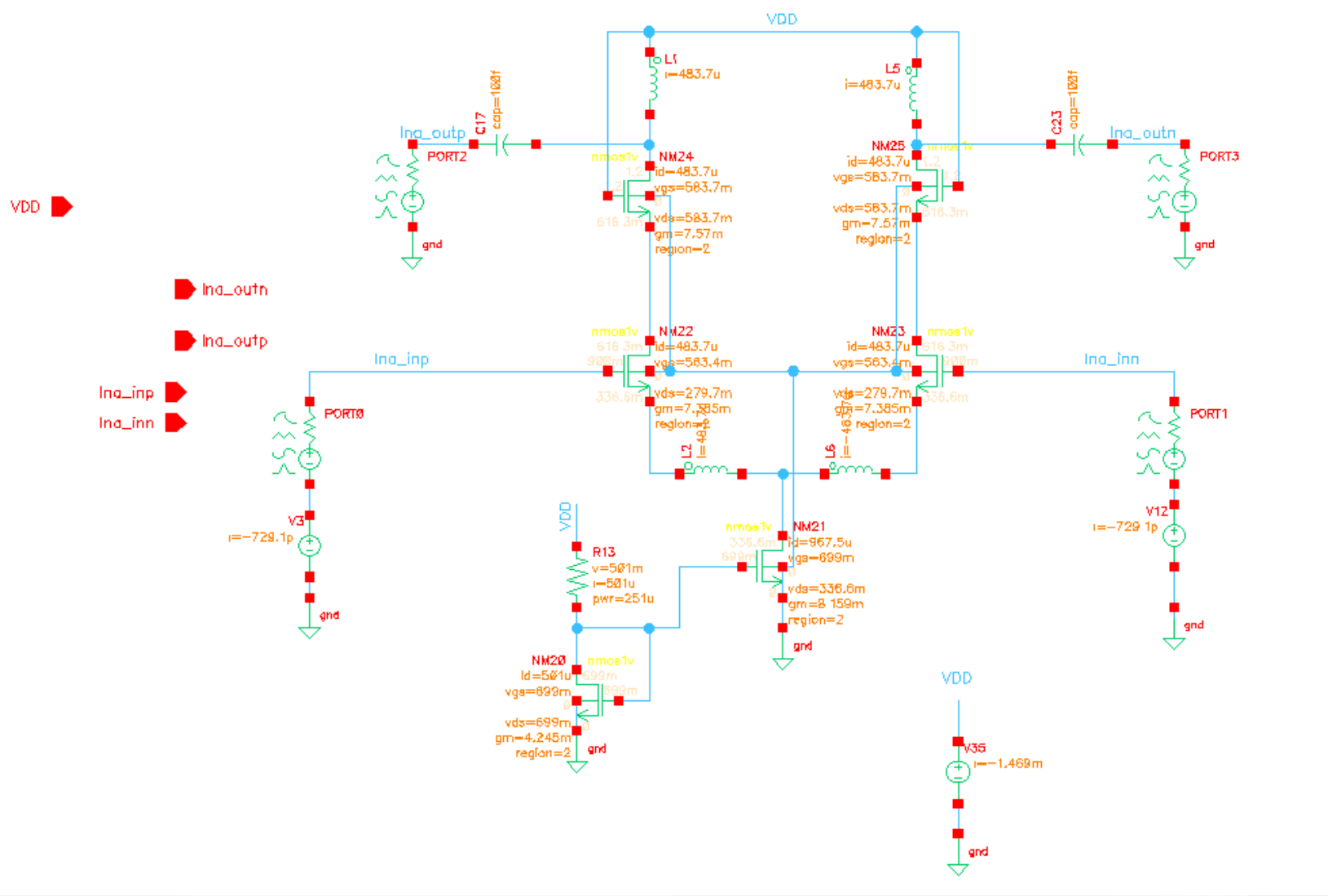

Receiver Design

Mixer + LPF (Noisy Output)

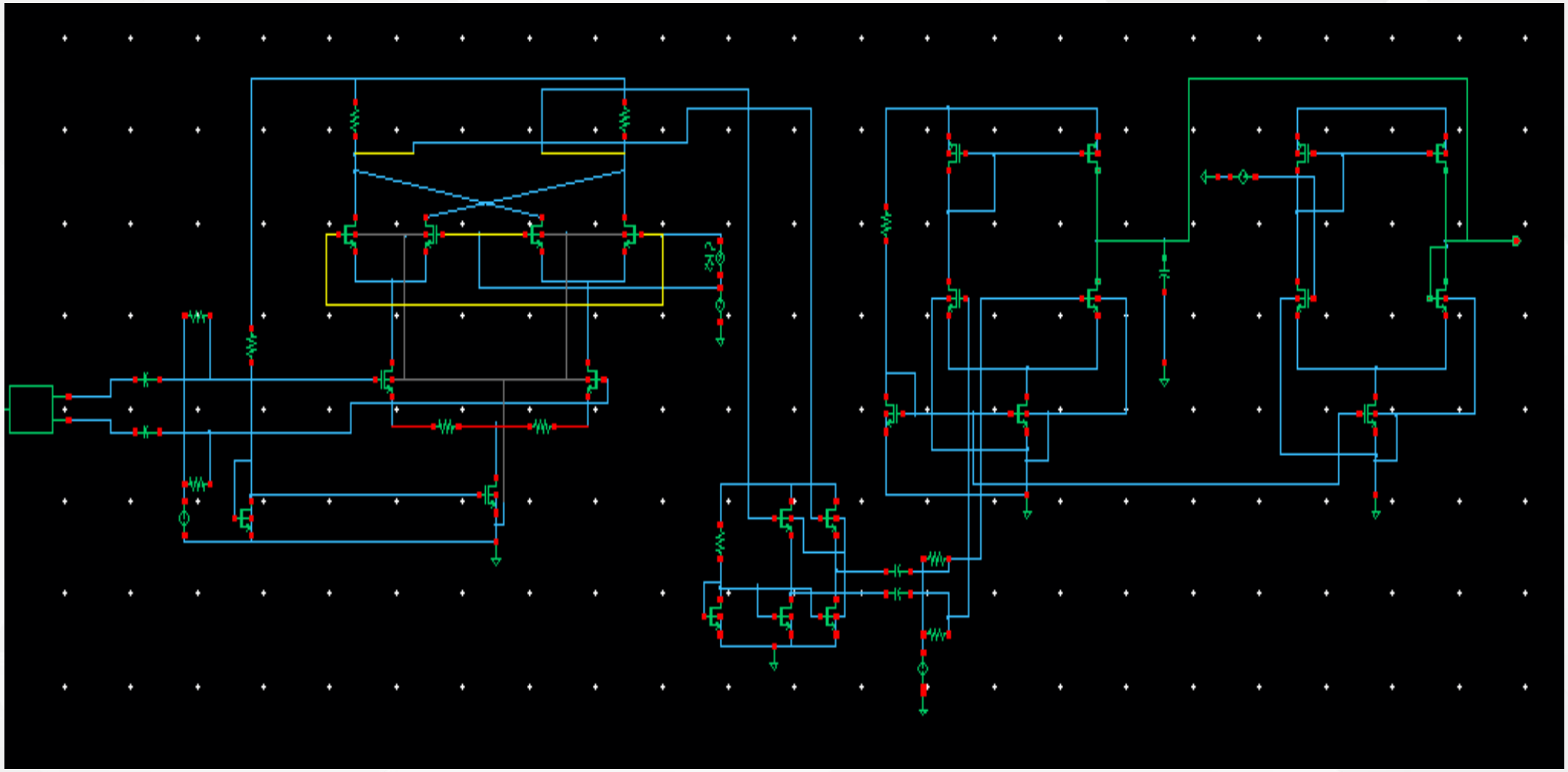

Receiver Design

Transient (Noisy)

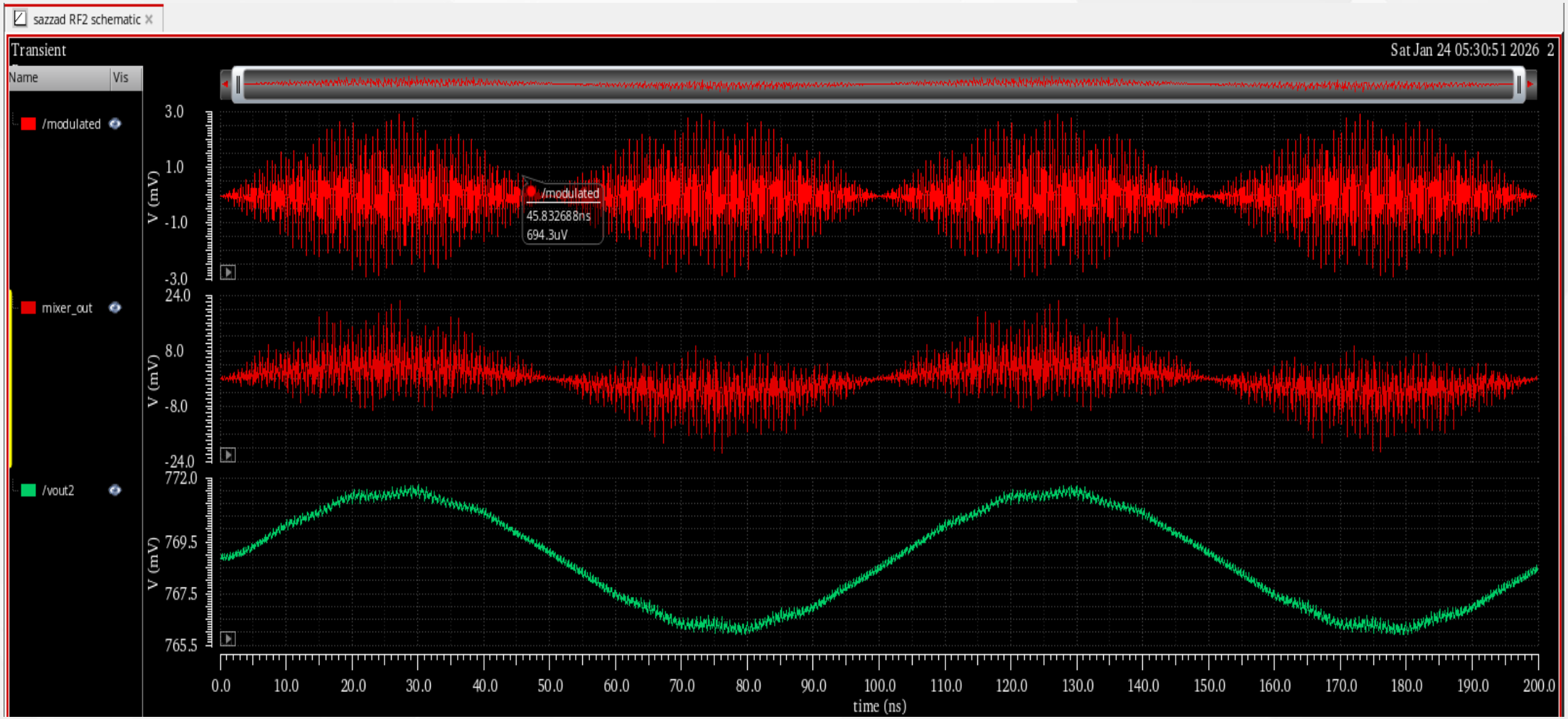

Receiver Design

LNA + Mixer + LPF (Clean Output)

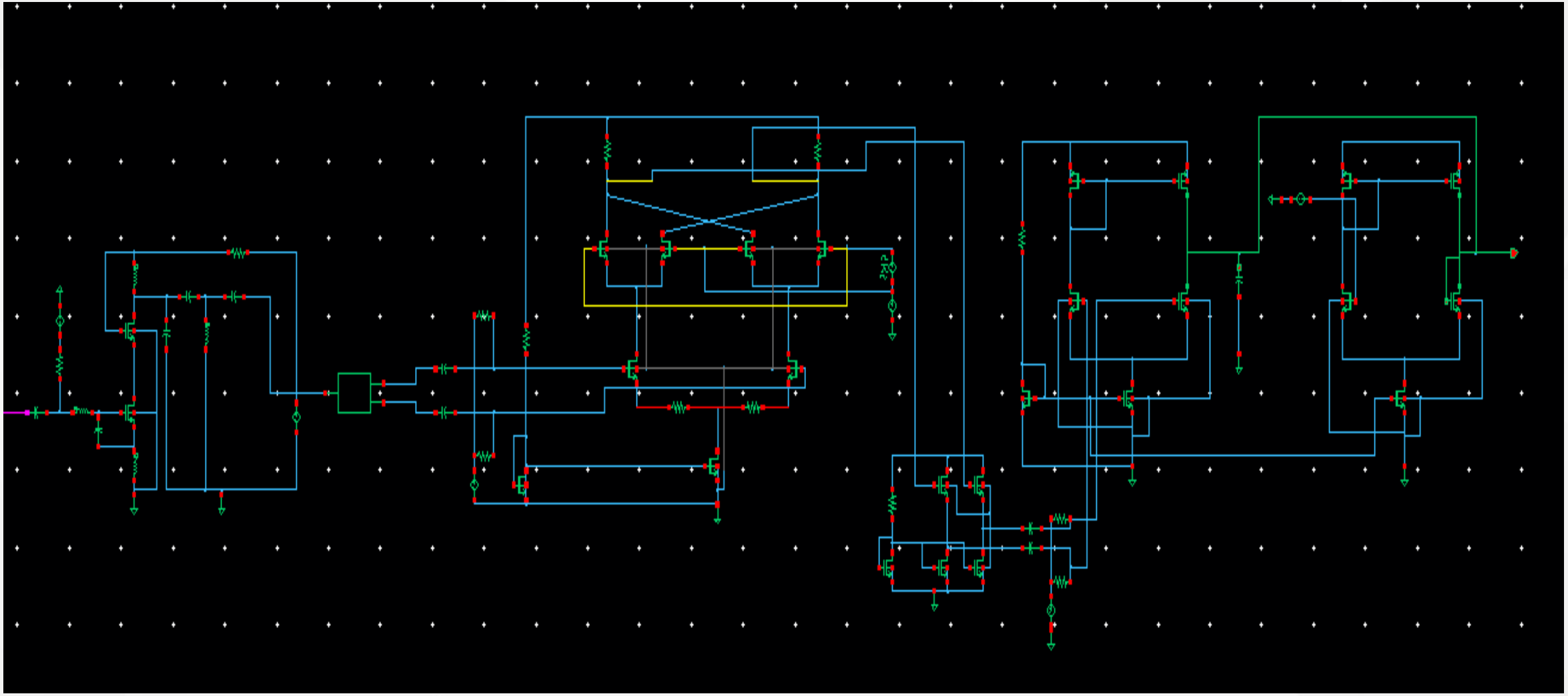

Receiver Design

Transient (Clean Output)

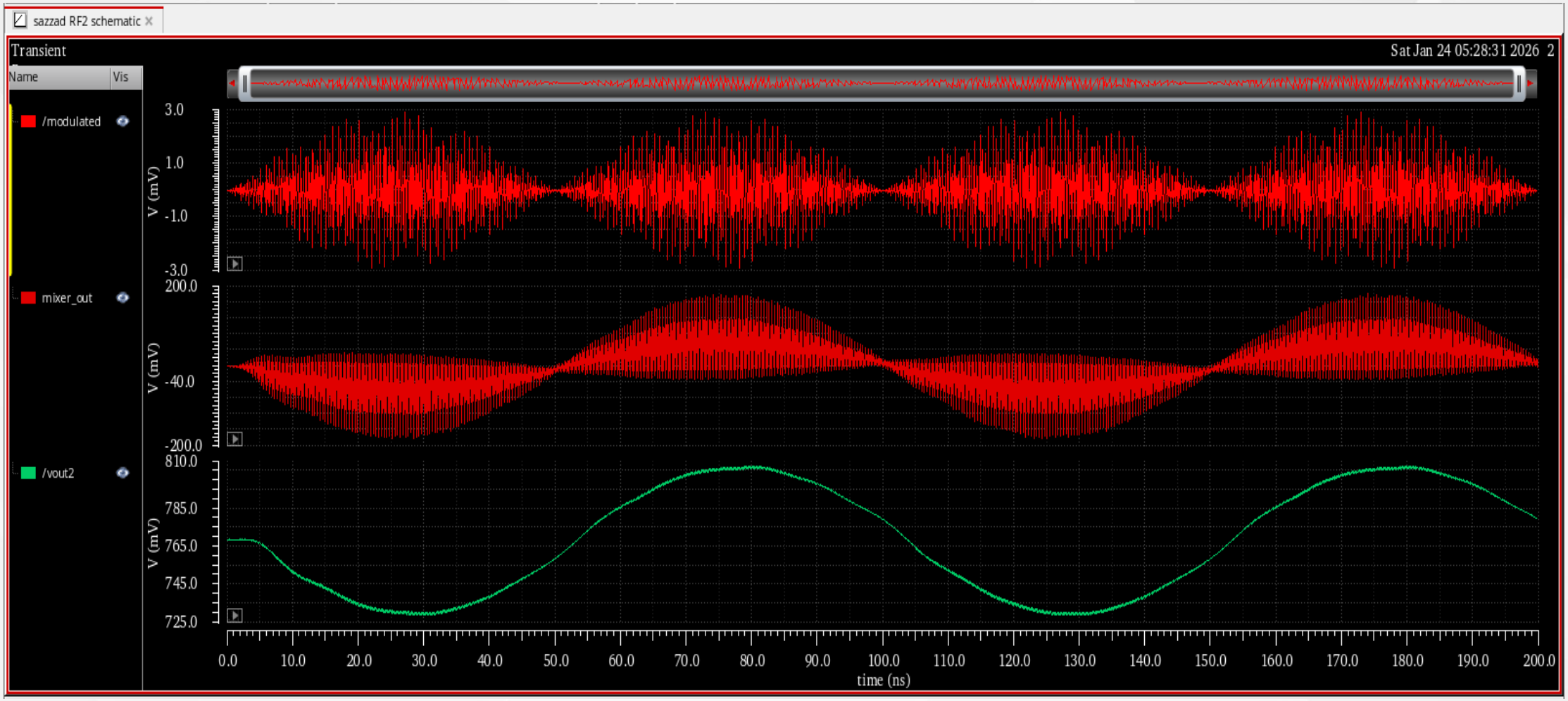
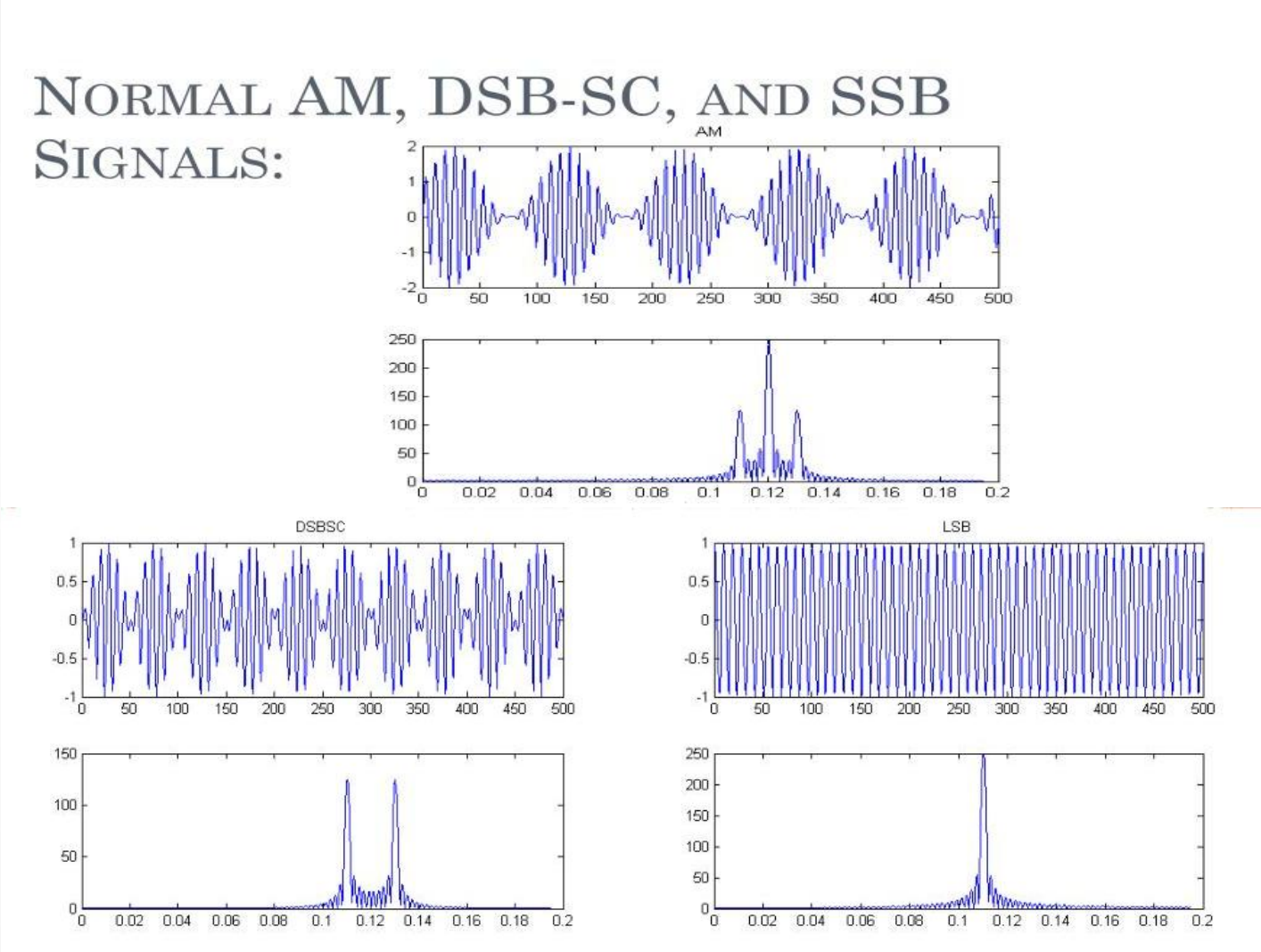
Receiver Design